3/2-directional valve, pneumatically operated, Series NL2-SOV

R474001577

General series information
Series NL2

- The AVENTICS Series NL maintenance units are suitable for all areas: as individual components or as assembled maintenance units, for centralized or decentralized compressed air preparation, in compact or powerful versions, for use in high or low temperatures. This line offers a complete, customizable compressed air preparation technology. It includes an option to combine every component in the Series to achieve the desired function, making it possible to adjust the components precisely to the application requirements.



Technical data

Activation	Pneumatically
Parts	3/2-directional valve
Nominal flow Qn	1100 l/min
Working pressure min.	0 bar
Working pressure max	16 bar
Connection type	Pipe connection
Sealing principle	Soft Seal
Type	Poppet valve
Can be assembled into blocks	Can be assembled into blocks
Control pressure min.	3.5 bar
Control pressure max.	16 bar
Min. ambient temperature	-10 °C
Max. ambient temperature	60 °C
Medium	Compressed air Neutral gases
Max. particle size	5 µm
Compressed air connection, exhaust	G 1/4

Nominal flow Qn 1 to 2	1100 l/min
Nominal flow Qn 2 to 3	450 l/min
Weight	0.4 kg

Material

Housing material	Die cast zinc
Seal material	Acrylonitrile butadiene rubber
Material, front cover	Acrylonitrile butadiene styrene
Part No.	R474001577

Technical information

The pressure dew point must be at least 15 °C under ambient and medium temperature and may not exceed 3 °C .

Nominal flow Qn with secondary pressure p2 = 6 bar at Δp = 1 bar

A change in the flow direction (from air supply on the left to air supply on the right) occurs by rotating installation by 180° about the vertical axis. Please see the operating instructions for further details.

Dimensions

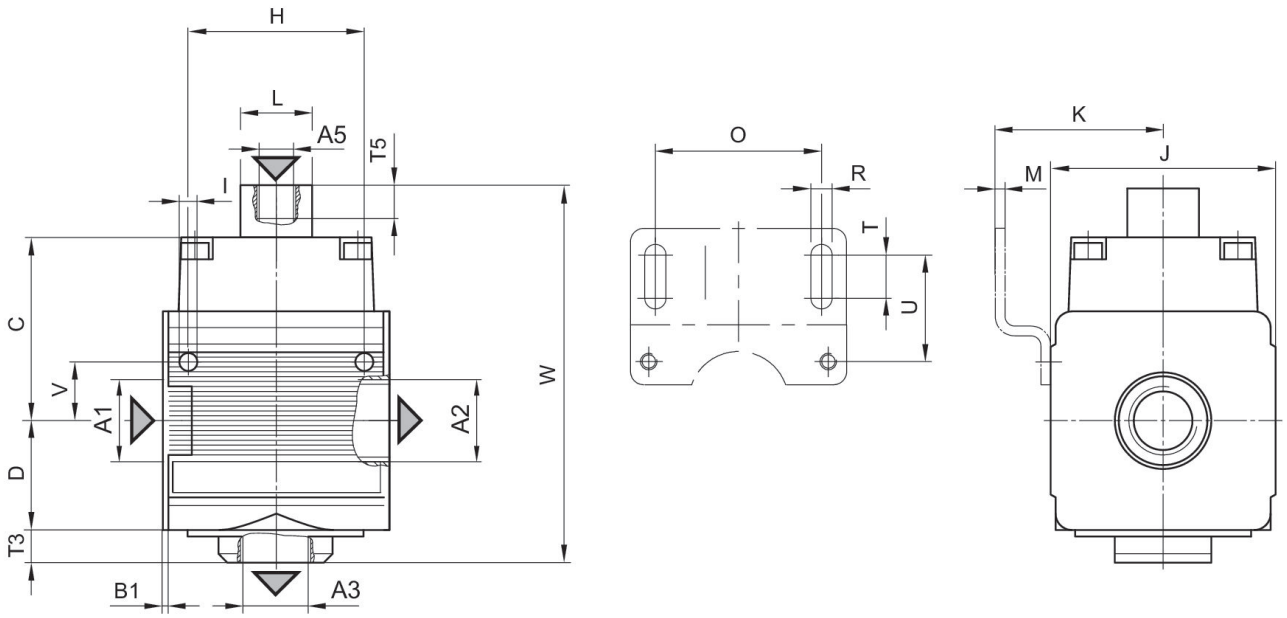

A1 = input
A2 = output
A3 = ventilation port
A5 = Control pressure connection

Dimensions in mm

Part No.	A1	A2	A3	A5	B1	C	D	F	H
R474001577	G 1/4	G 1/4	G 1/4	G 1/8	1.5	44	26	10	36

Part No.	I	J	K	M	O	R	T	T5	U
R474001577	4.4	47	43.5	3	38	5.4	8	13	27.5

Part No.	V	W
R474001577	12.3	96

Flow rate characteristic, p2 = 0,05 - 7 bar

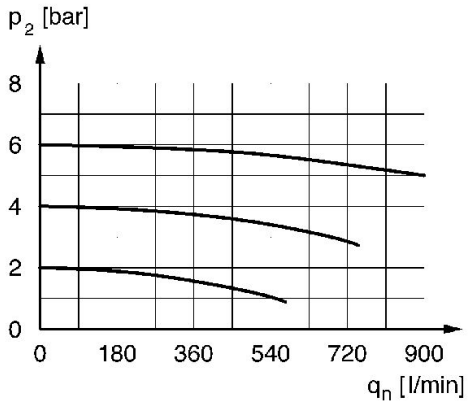

p2 = Secondary pressure
qn = Nominal flow