3/2-directional valve, Series AP

R450055451

Series AP Directional valves

The AVENTICS Series AP offers a wide range of poppet valves with aluminium housing. With many actuation control versions available (roller, lever, pedal, push-button or plunger) the AP Series is the universal solution for automation systems and panel installation.

- Light and robust valves
- Various mechanical actuating controls
- panel installation



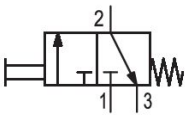

Technical data

Industry	Industrial
Activation	Mechanical
Valve type	Poppet valve
Switching principle	3/2, double air pilot
Plate connection	Pipe connection
Actuating element	panel installation
Compressed air connection type	Internal thread
Compressed air connection input	M5
Compressed air connection output	M5
Nominal flow Qn 1 to 2	190 l/min
Nominal flow Qn 2 to 3	150 l/min
Min. working pressure	0 bar
Max. working pressure	10 bar
Min. ambient temperature	-30 °C
Max. ambient temperature	80 °C
Min. medium temperature	-30 °C
Max. medium temperature	80 °C
Medium	Compressed air

Min. oil content of compressed air	0 mg/m³
Max. oil content of compressed air	5 mg/m³
Max. particle size	5 µm
Weight	0.068 kg

Material

Housing material	Aluminum
Seal material	Acrylonitrile butadiene rubber
Part No.	R450055451

Technical information

The min. control pressure must be adhered to, since otherwise faulty switching and valve failure may result!

The pressure dew point must be at least 15 °C less than ambient and medium temperature and may not exceed 3 °C.

The oil content of compressed air must remain constant during the life cycle.

Use only the approved oils from AVENTICS. Further information can be found in the “Technical information” document (available in https://www.emerson.com/en-us/support).

Nominal flow Qn at 6 bar and Δp = 1 bar

Dimensions in mm

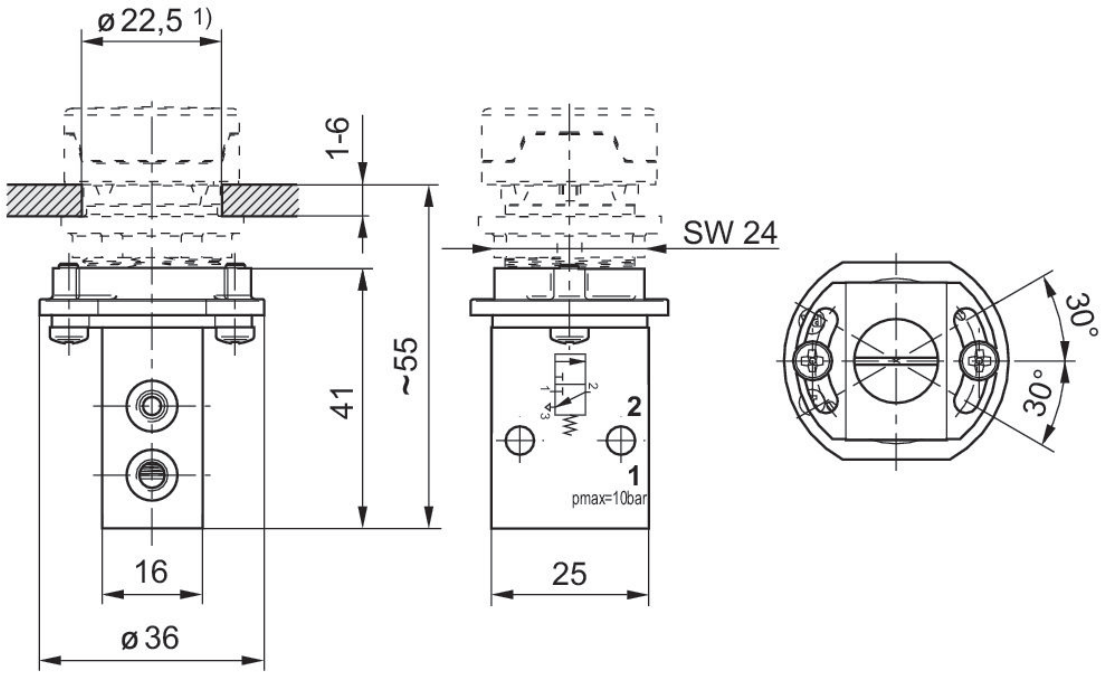

1) cut-out in the front plate

Actuating force+

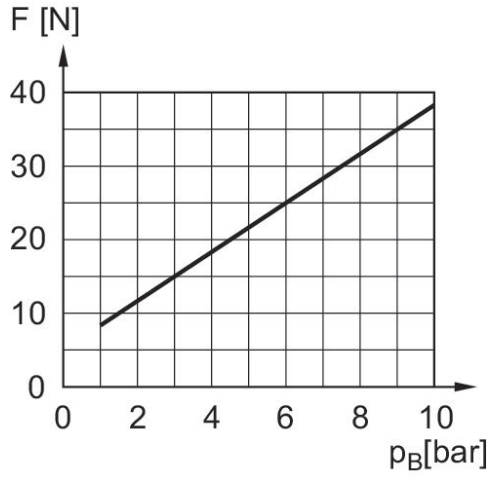

F = actuating force
P_B = Working pressure