Multipole plug, series CON-MP

R419500463

AVENTICS Series CON-MP Multipole plugs with cable

The AVENTICS Series CON-MP-with cable offers cables with a multipol plug like D-SUB with various numbers of pins and different length, optimized for our focused valve system Series like AV Also C/2 connectors for Valve systems of Series CL03 are available.

- Multipole plug connectors with connected cable
- Valve system control, D-Sub plug



Technical data

Industry	Industrial
Note	D-Sub socket, 25 pin angled Compact design
Type	Multipole
Cable	with cable
Operational voltage	24 V DC
Electrical connection 1, type	Socket
Electrical connection 1, thread size	D-Sub
Electrical connection 1, number of poles	25-pin
Cable exit 1	angled
Cable exit angle	90°
Electrical connection 2, type	open cable ends
Electrical connection 2, number of poles	25-pin
Shielding	unshielded
Cable length L	3 m
suitable for dynamic laying	suitable for dynamic laying
Min. bending radius	78.75 mm
Protection class	IP65 IP67

Multipole plug, series CON-MP

R419500463

Min. ambient temperature	-20 °C
Max. ambient temperature	80 °C
Max. current	3 A
Wire cross-section	0.25 mm²
Cable-Ø	10.5 mm
Weight	0.49 kg

Material

Housing material	Thermoplastic elastomer
Material cable sheath	Polyurethane
Part No.	R419500463

Technical information

Min. bending radius, fixed installation: 52.5 mm

Min. bending radius, flexible installation: 78.75 mm

The specified protection class is only valid in assembled and tested state.

The increased wire cross-section of pin 25 is 0.82 mm².

Dimensions

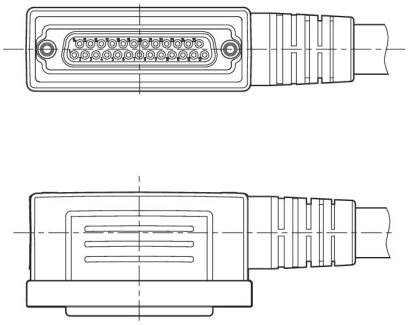

PIN assignment and cable colors

cable identification as per DIN 47100

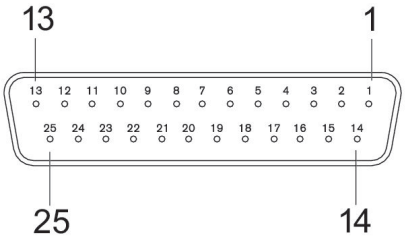

Multipole plug, series CON-MP

R419500463

Socket

D-Sub socket, 25 pin

Pin	1	2	3	4	5	6	7	8	9	10
Color	white	brown	green	yellow	gray	pink	blue	red	black	violet

Pin	11	12	13	14	15	16	17	18	19	20
Color	gray/pink	red/blue	white/green	brown/ green	white/yellow	yel- low/brown	white/gray	gray/brown	white/pink	pink/brown

Pin	21	22	23	24	25
Color	white/blue	brown/blue	white/red	brown/red	white/black