Round plug connectors with cable, Series CON-RD

R412026800

AVENTICS Series CON-RD Round plug connectors with cable

The AVENTICS Series CON-RD-with cable offers cables with round plug connectors for various types like M8x1, M12x1 or 7/8-16UNC and different cable length, optimized for our focused valves with M8x1 or M12x1 connection and electronic systems like AES and G3.

- Round plug connectors with connected cable
- M8x1, M12x1, M23, 7/8"
- Y cable



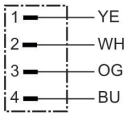

Technical data

Industry	Industrial
Type	Round plug connectors
Operational voltage	48 V AC/DC
Electrical connection 1, type	Plug
Electrical connection 1, thread size	M12x1
Electrical connection 1, number of poles	4-pin
Electrical connection 1, coding	D-coded
Cable exit 1	straight
Cable exit angle	180°
Electrical connection 2, type	open cable ends
Electrical connection 2, number of poles	4-pin
Number of wires	4
Shielding	shielded
Cable length L	10 m
suitable for dynamic laying	suitable for dynamic laying
Min. bending radius	65 mm
Certificates	RoHS UL (Underwriters Laboratories) CE declaration of conformity

	Free of substances that impair surface wetting in the coating process
Protection class	IP65 IP67 IP68
Min. ambient temperature	-30 °C
Max. ambient temperature	90 °C
Protocol	Profinet POWERLINK EtherNet/IP EtherCAT
Connector standard	IEC 61076-2-101
Max. current	4 A
Wire cross-section	0.324 mm²
Cable-Ø	6.5 mm
Delivery unit	1 piece

Material

Housing material	Thermoplastic polyurethane (TPU)
Material cable sheath	Polyurethane
Part No.	R412026800

Technical information

The specified protection class is only valid in assembled and tested state.

Dimensions in mm

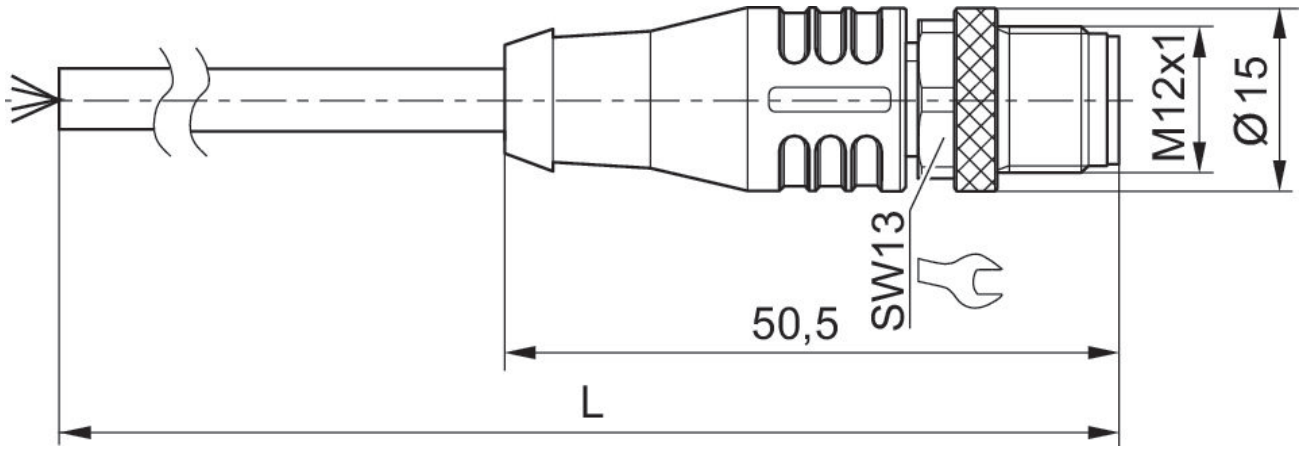

L = cable length

Plug pin assignment

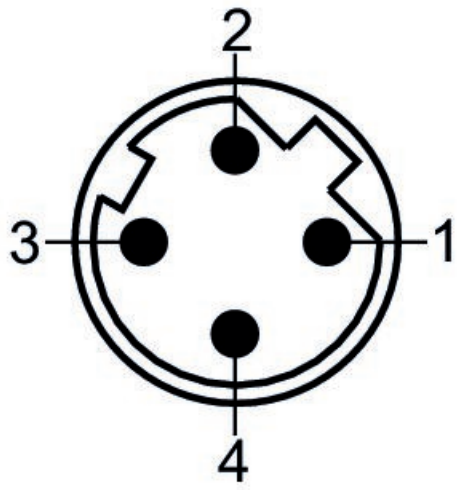

(1) YE = yellow
(2) WH = white
(3) OG = orange
(4) BU = blue