Round plug connectors with cable, Series CON-RD

R412026799

AVENTICS Series CON-RD Round plug connectors with cable

The AVENTICS Series CON-RD-with cable offers cables with round plug connectors for various types like M8x1, M12x1 or 7/8-16UNC and different cable length, optimized for our focused valves with M8x1 or M12x1 connection and electronic systems like AES and G3.

- Round plug connectors with connected cable
- M8x1, M12x1, M23, 7/8"
- Y cable



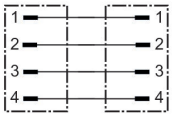

Technical data

Industry	Industrial
Type	Round plug connectors
Operational voltage	48 V AC/DC
Electrical connection 1, type	Plug
Electrical connection 1, thread size	M12x1
Electrical connection 1, number of poles	4-pin
Electrical connection 1, coding	D-coded
Cable exit 1	angled
Cable exit angle	90°
Electrical connection 2, type	Plug
Electrical connection 2, thread size	M12x1
Electrical connection 2, number of poles	4-pin
Electrical connection 2, coding	D-coded
Cable exit 2	straight
Number of wires	4
Shielding	shielded
Cable length L	5 m
suitable for dynamic laying	suitable for dynamic laying
Min. bending radius	52 mm

Round plug connectors with cable, Series CON-RD

R412026799

Certificates	RoHS UL (Underwriters Laboratories) CE declaration of conformity Free of substances that impair surface wetting in the coating process
Protection class	IP65 IP67 IP68
Min. ambient temperature	-30 °C
Max. ambient temperature	90 °C
Protocol	Profinet POWERLINK EtherNet/IP EtherCAT
Connector standard	IEC 61076-2-101
Max. current	4 A
Wire cross-section	0.324 mm²
Cable-Ø	6.5 mm

Material

Housing material	Thermoplastic polyurethane (TPU)
Material cable sheath	Polyurethane
Part No.	R412026799

Technical information

The specified protection class is only valid in assembled and tested state.

Dimensions in mm

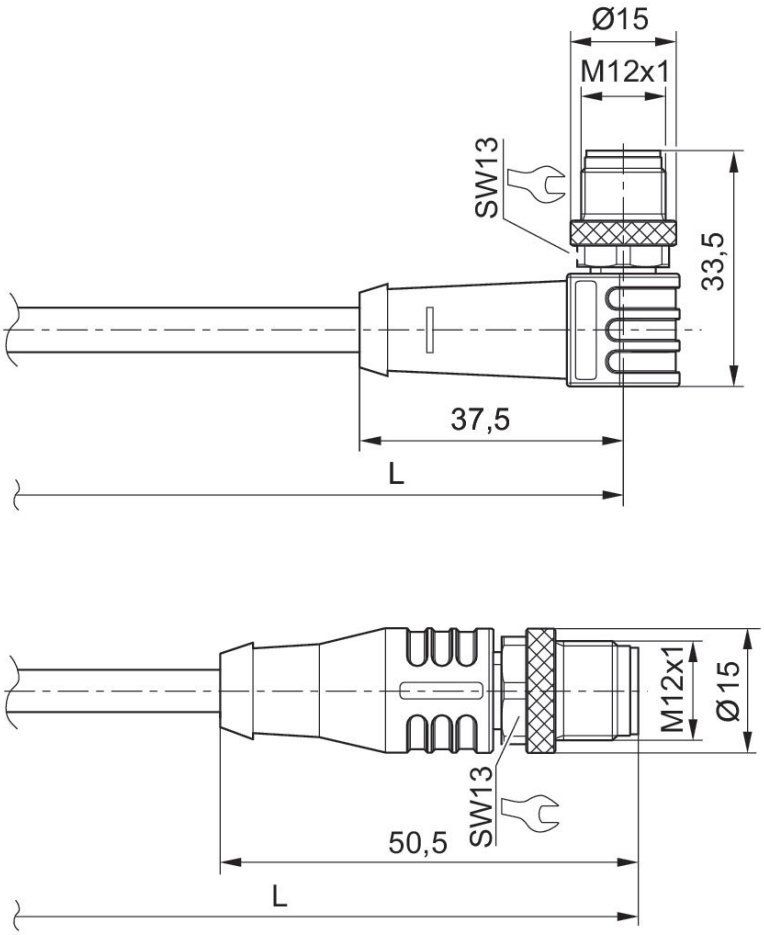

L = cable length

Plug pin assignment

