Round plug connector, Series CON-RD

R412021678

AVENTICS Series CON-RD Round plug connectors with cable

The AVENTICS Series CON-RD-with cable offers cables with round plug connectors for various types like M8x1, M12x1 or 7/8-16UNC and different cable length, optimized for our focused valves with M8x1 or M12x1 connection and electronic systems like AES and G3.

- Round plug connectors with connected cable
- M8x1, M12x1, M23, 7/8"
- Y cable



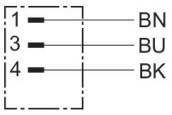

Technical data

Industry	Industrial
Note	Archive product: Do not use in new constructions!
Type	Round plug connectors
Cable	with cable
Operational voltage	48 V AC/DC
Electrical connection 1, type	Plug
Electrical connection 1, thread size	M8x1
Electrical connection 1, number of poles	3-pin
Electrical connection 1, coding	A-coded
Cable exit 1	angled
Cable exit angle	90°
Electrical connection 2, type	open cable ends
Electrical connection 2, number of poles	3-pin
Number of wires	3
Shielding	unshielded
Cable length L	2 m
suitable for dynamic laying	suitable for dynamic laying
Min. bending radius	41 mm
Protection class	IP68

Round plug connector, Series CON-RD

R412021678

Min. ambient temperature	-25 °C
Max. ambient temperature	80 °C
Max. current	4 A
Wire cross-section	0.25 mm²
Cable-Ø	4.1 mm
Weight	0.06 kg

Material

Housing material	Polyurethane
Material cable sheath	Polyurethane
Part No.	R412021678

Technical information

The specified protection class is only valid in assembled and tested state.

Dimensions

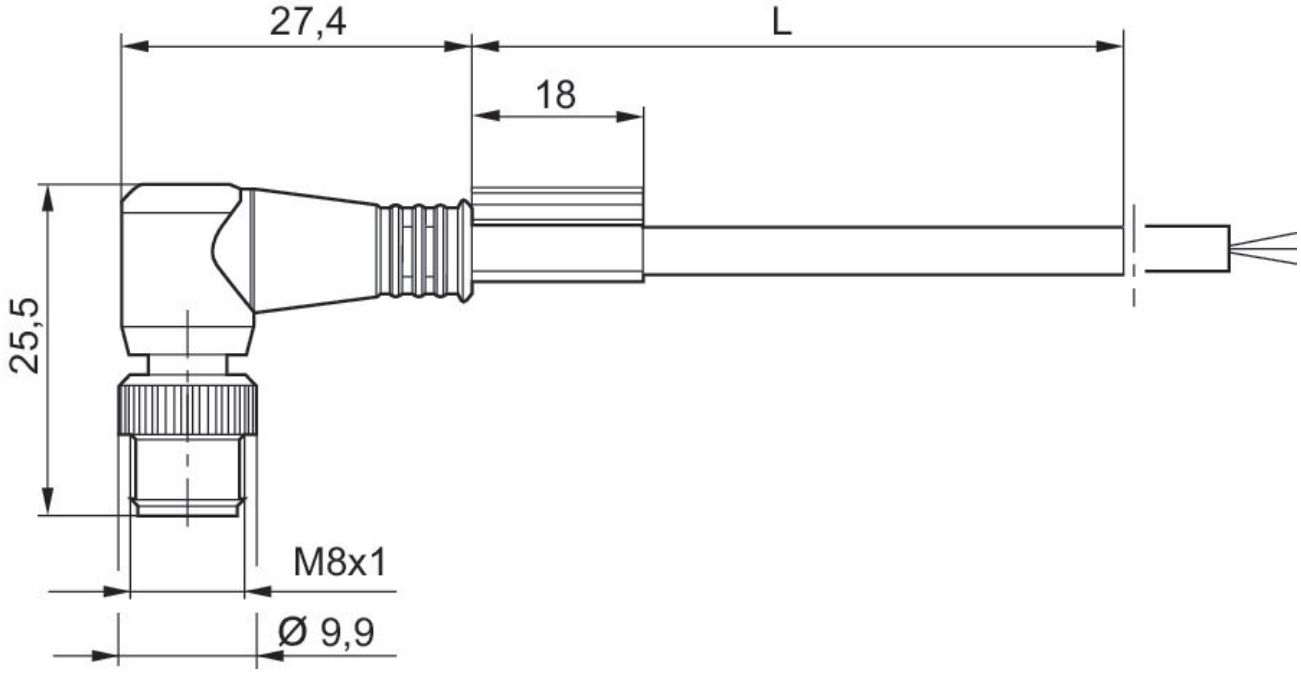

L = length

Round plug connector, Series CON-RD

R412021678

Plug pin assignment

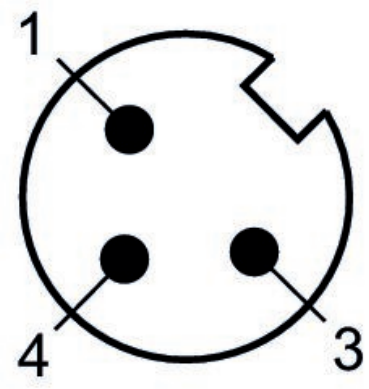

(1) BN=brown (3) BU=blue (4) BK=black