Pressure regulator, Series AS1-RGS-...-DS

R412014709

Series AS1

The AVENTICS Series AS1 is a modular, versatile maintenance unit for universal application. This Series offers compact dimensions, is highly efficient, lightweight and easy-to-use. The AVENTICS Series AS guarantees reliability, safety, and efficiency with a simplified assembly and maintenance efforts.



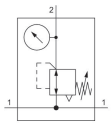

Technical data

Industry	Industrial
Note	Archive product: Do not use in new constructions! with continuous pressure supply With integrated pressure gauge
Function	Standard pressure regulator
Parts	Pressure regulator with continuous pressure supply
Pressure gauge	With integrated pressure gauge
Mounting orientation	Any
Regulator type	Diaphragm-type pressure regulator
Port	G 1/4
Nominal flow Qn	1000 l/min
Min. regulation range	0.5 bar
Max. regulation range	8 bar
Min. working pressure	0.5 bar
Max. working pressure	12 bar
Min. ambient temperature	-10 °C
Max. ambient temperature	50 °C
Air supply	right

Pressure regulator, Series AS1-RGS-...-DS

R412014709

Activation	Manual
Regulator function	with relieving air exhaust
Regulator type	Can be assembled into blocks
Pressure supply	double
Lock type	not lockable
with continuous pressure supply	with continuous pressure supply
Max. pressure gauge Ø in blocked state	40 mm
Medium	Compressed air Neutral gases
Weight	0.209 kg

Material

Housing material	Polyamide
Material front plate	Acrylonitrile butadiene styrene
Seal material	Acrylonitrile butadiene rubber
Part No.	R412014709

Technical information

The pressure dew point must be at least 15 °C less than ambient and medium temperature and may not exceed 3 °C.

Relieving exhaust (≤ 0.3 bar over set pressure)

With rear exhaust (>3 bar)

Nominal flow Qn with secondary pressure p2 = 6 bar at Δp = 1 bar

Pressure regulator, Series AS1-RGS-...-DS

R412014709

2026-03-31

Accessories overview

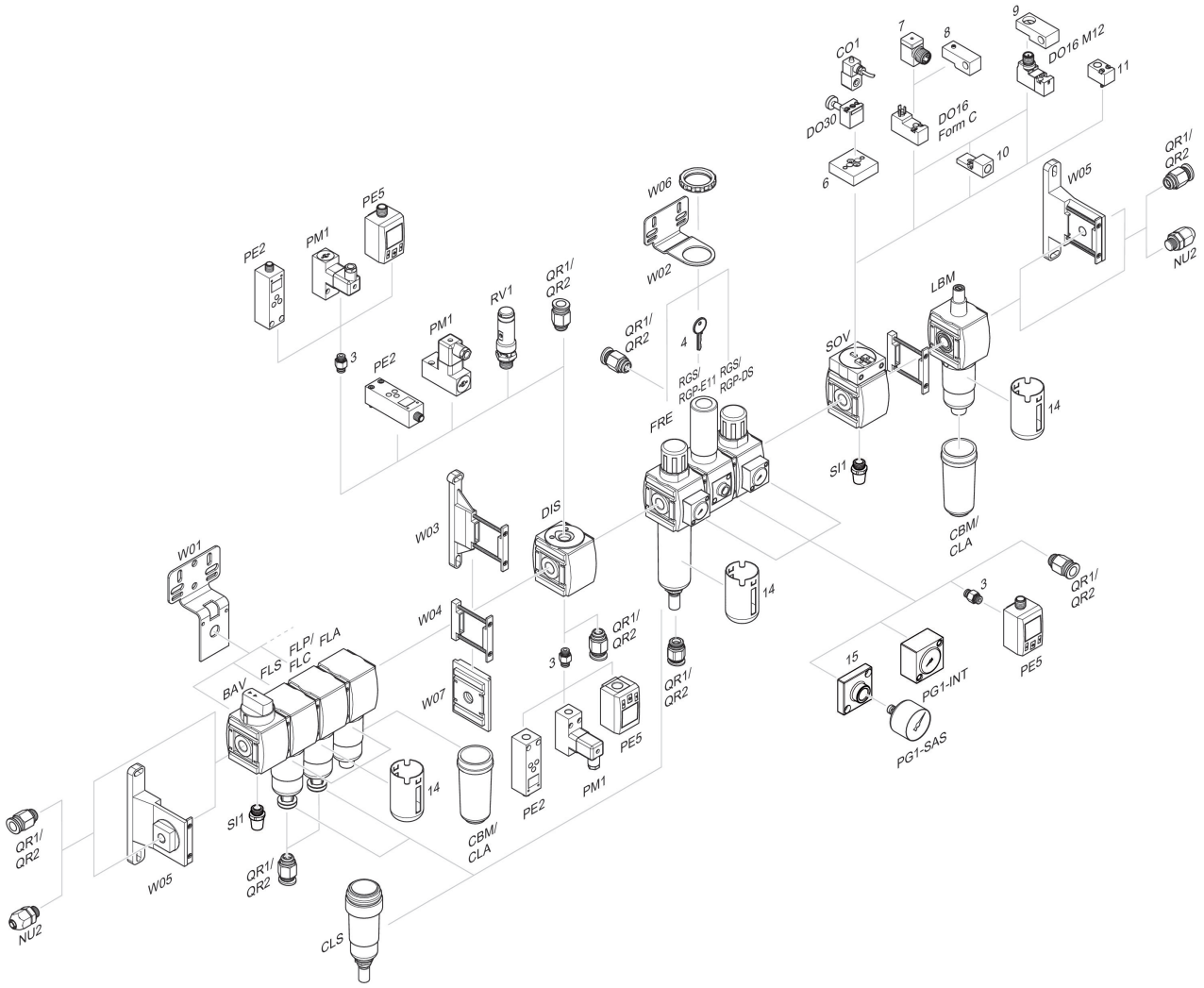

3 = Double nipple 4 = Key for E11 locking 6 = Transition plate DO30 7 = Adapter, Series CON-VP 8 = Mounting aid DO16, form C 9 = Mounting aid DO16, M12 10 = Adapter for external pilot air 11 = Adapter pneumatic operation 14 = Protective guard 15 = Transition plate for assembling a pressure gauge with connection thread G 1/8

Application example

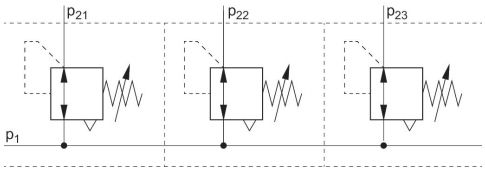

p1 = Working pressure

Pressure characteristics curve

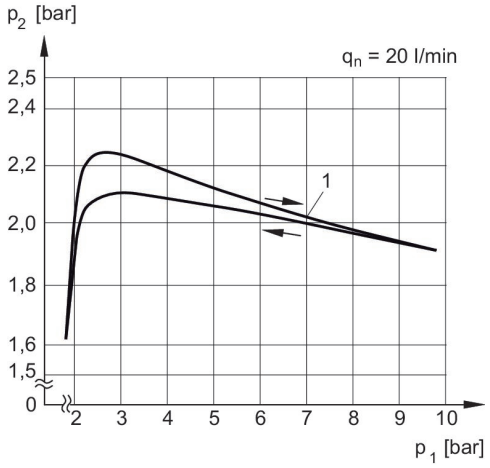

p1 = Working pressure
p2 = Secondary pressure
qn = Nominal flow
1) = Starting point

Flow rate characteristic, p2 = 0,05 - 7 bar

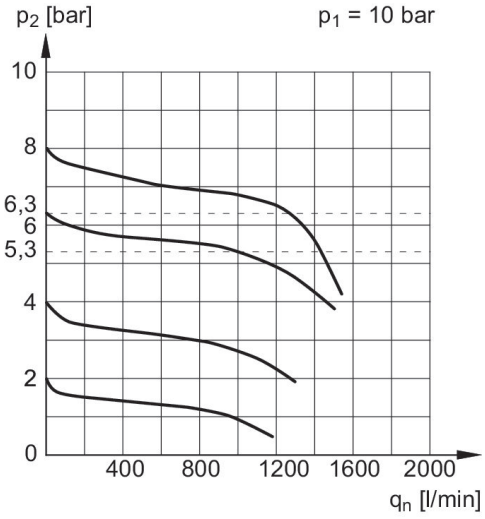

p1 = Working pressure
p2 = Secondary pressure
qn = Nominal flow

Dimensions in mm

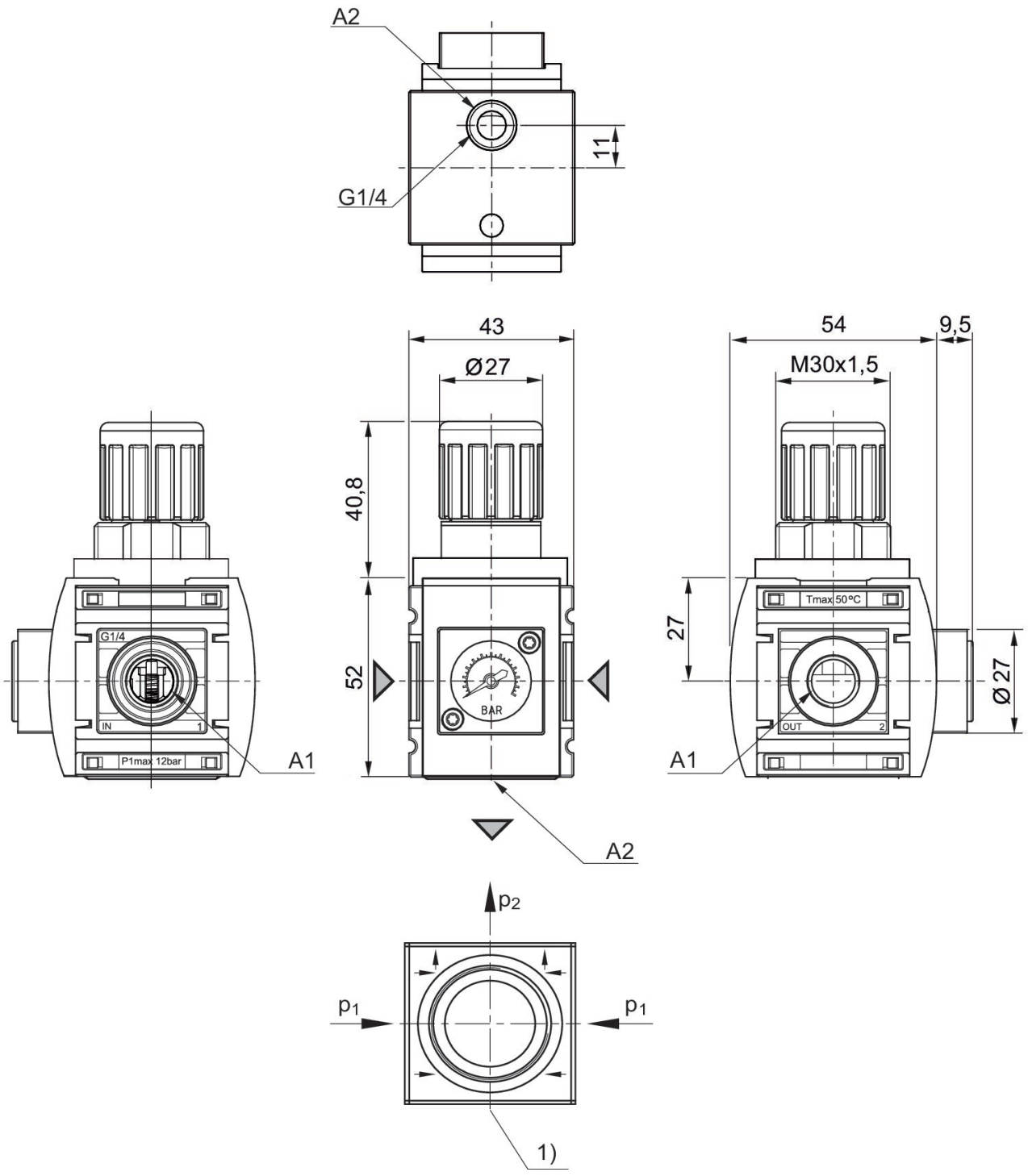

A1 = input
A2 = output
1) Pressure gauge connection