Microfilter, Series AS1-FLC

R412014695

2026-07-09

Series AS1

The AVENTICS Series AS1 is a modular, versatile maintenance unit for universal application. This Series offers compact dimensions, is highly efficient, lightweight and easy-to-use. The AVENTICS Series AS guarantees reliability, safety, and efficiency with a simplified assembly and maintenance efforts.



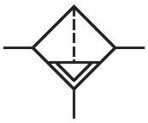

Technical data

Industry	Industrial
Note	Archive product: Do not use in new constructions!
Parts	Microfilter
Reservoir	reservoir, polycarbonate, with metal protective guard
Port	G 1/4
Filter porosity	0.01 µm
Nominal flow Qn	350 l/min
Condensate drain	semi-automatic, open without pressure
Min. working pressure	1.5 bar
Max. working pressure	12 bar
Min. ambient temperature	-10 °C
Max. ambient temperature	50 °C
Medium	Compressed air Neutral gases
Air supply	right
Max. achievable compressed air class acc. to ISO 8573-1:2010	1 : - : 2
Filter reservoir volume	12 cm³

Filter element	exchangeable
Recommended pre-filtering	0.3 µm
Weight	0.202 kg
Mounting orientation	vertical
Type	Can be assembled into blocks

Material

Housing material	Polyamide
Material front plate	Acrylonitrile butadiene styrene
Seal material	Acrylonitrile butadiene rubber
Material reservoir	Polycarbonate
Material protective guard	metal
Material filter insert	Borosilicate aluminum
Part No.	R412014695

Technical information

The pressure dew point must be at least 15 °C less than ambient and medium temperature and may not exceed 3 °C.

Note: Polycarbonate reservoirs are susceptible to solvents, supplementary information can be found at "Customer information".

Nominal flow Qn with secondary pressure p2 = 6 bar at Δp = 0,1 bar

Dimensions in mm

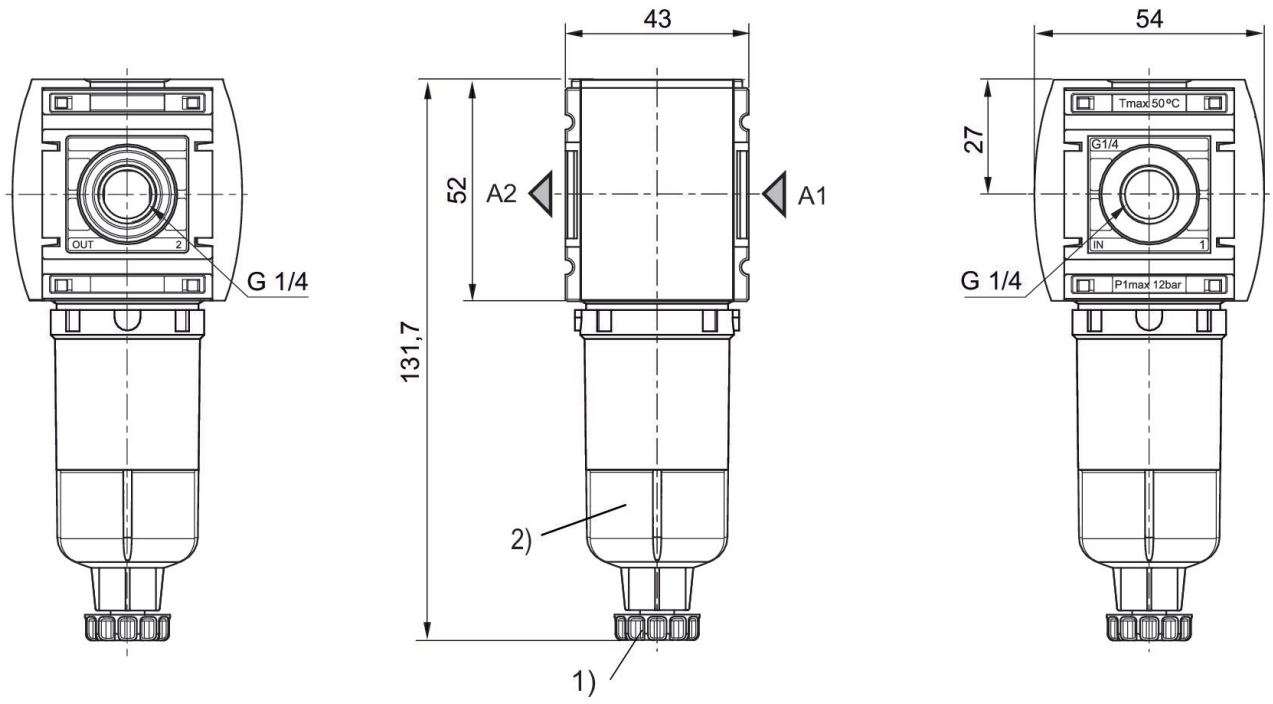

1) Semi-automatic condensate drain
2) Reservoir: polycarbonate

Microfilter, Series AS1-FLC

R412014695

2026-07-09

Accessories overview

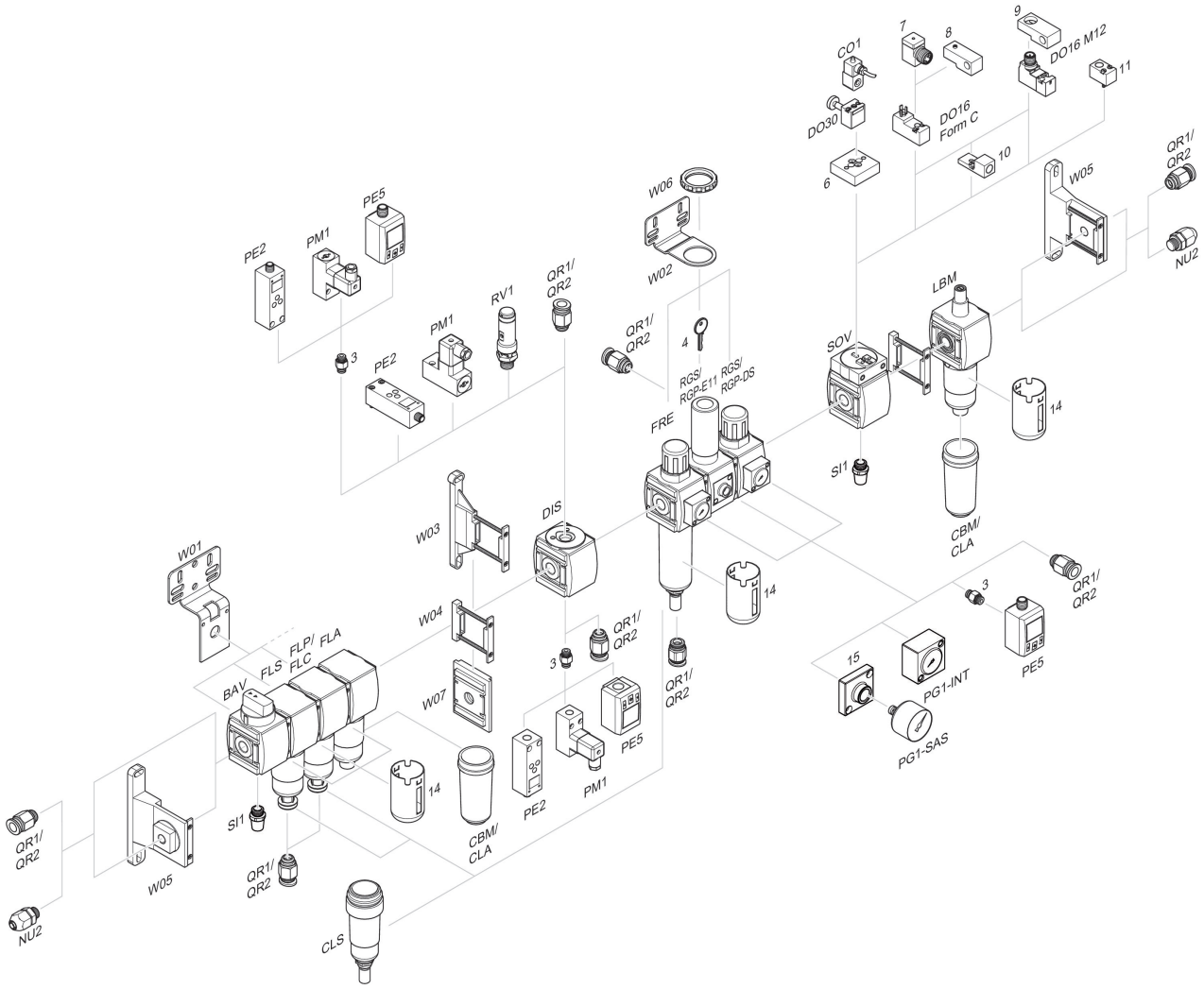

3 = Double nipple 4 = Key for E11 locking 6 = Transition plate DO30 7 = Adapter, Series CON-VP 8 = Mounting aid DO16, form C 9 = Mounting aid DO16, M12 10 = Adapter for external pilot air 11 = Adapter pneumatic operation 14 = Protective guard 15 = Transition plate for assembling a pressure gauge with connection thread G 1/8

Flow rate characteristic, p2 = 0,05 - 7 bar

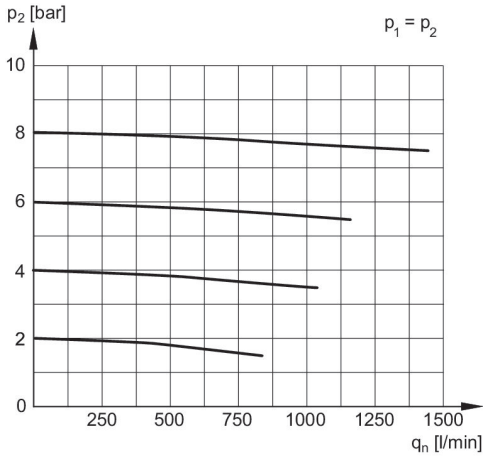

p1 = Working pressure
p2 = Secondary pressure
qn = Nominal flow