Standard filter, Series AS1-FLS

R412014680

2026-07-29

Series AS1

The AVENTICS Series AS1 is a modular, versatile maintenance unit for universal application. This Series offers compact dimensions, is highly efficient, lightweight and easy-to-use. The AVENTICS Series AS guarantees reliability, safety, and efficiency with a simplified assembly and maintenance efforts.



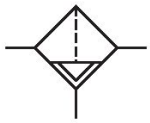

Technical data

Industry	Industrial
Note	Archive product: Do not use in new constructions!
Parts	Filter
Reservoir	reservoir, polycarbonate, without protective guard
Port	G 1/4
Filter porosity	5 µm
Nominal flow Qn	1000 l/min
Condensate drain	fully automatic, closed without pressure
Min. working pressure	1.5 bar
Max. working pressure	12 bar
Min. ambient temperature	-10 °C
Max. ambient temperature	50 °C
Medium	Compressed air Neutral gases
Air supply	right
Max. achievable compressed air class acc. to ISO 8573-1:2010	6 : 7 : -
Filter reservoir volume	16 cm³
Filter element	exchangeable

Weight	0.184 kg
Mounting orientation	vertical
Type	Can be assembled into blocks

Material

Housing material	Polyamide
Material front plate	Acrylonitrile butadiene styrene
Seal material	Acrylonitrile butadiene rubber
Material reservoir	Polycarbonate
Material filter insert	Cellpor
Part No.	R412014680

Technical information

The pressure dew point must be at least 15 °C less than ambient and medium temperature and may not exceed 3 °C.

Note: Polycarbonate reservoirs are susceptible to solvents, supplementary information can be found at "Customer information".

Also suitable for separation of fluid oil or water due to the design.

Nominal flow Qn with secondary pressure p2 = 6 bar at Δp = 1 bar

Standard filter, Series AS1-FLS

R412014680

2026-07-29

Dimensions in mm

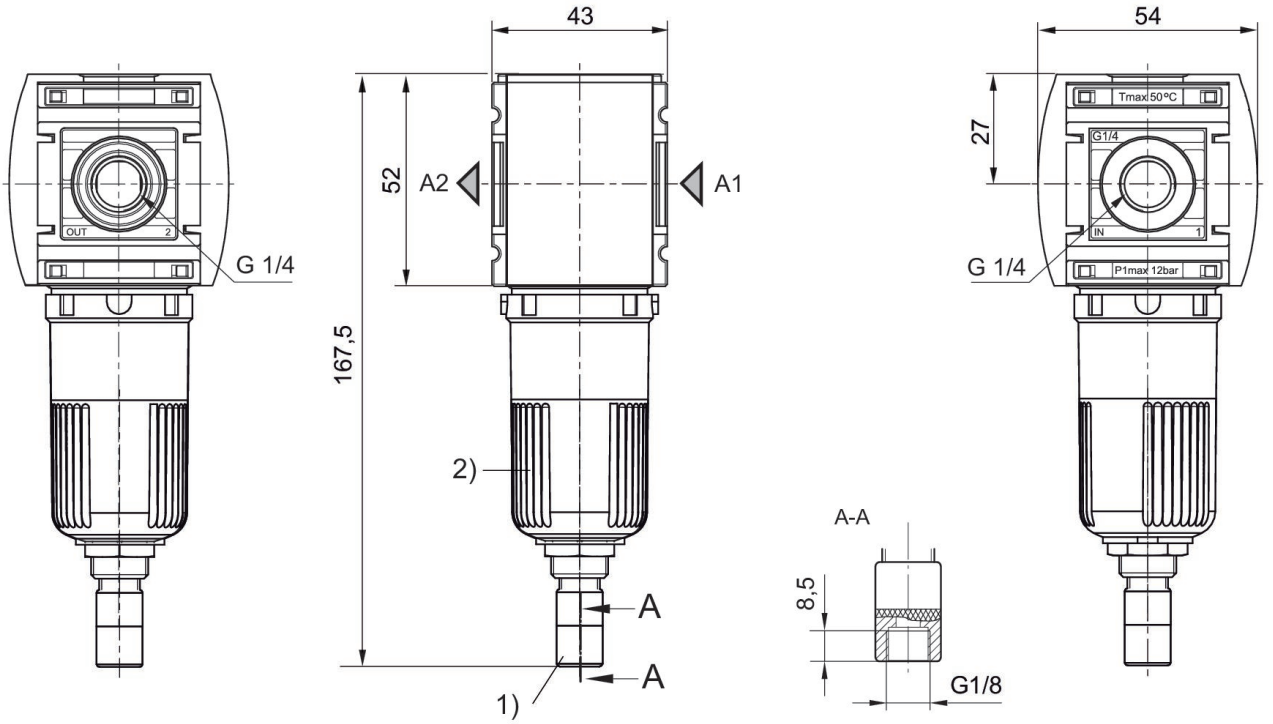

1) Fully automatic condensate drain
2) Reservoir: polycarbonate

Standard filter, Series AS1-FLS

R412014680

2026-07-29

Accessories overview

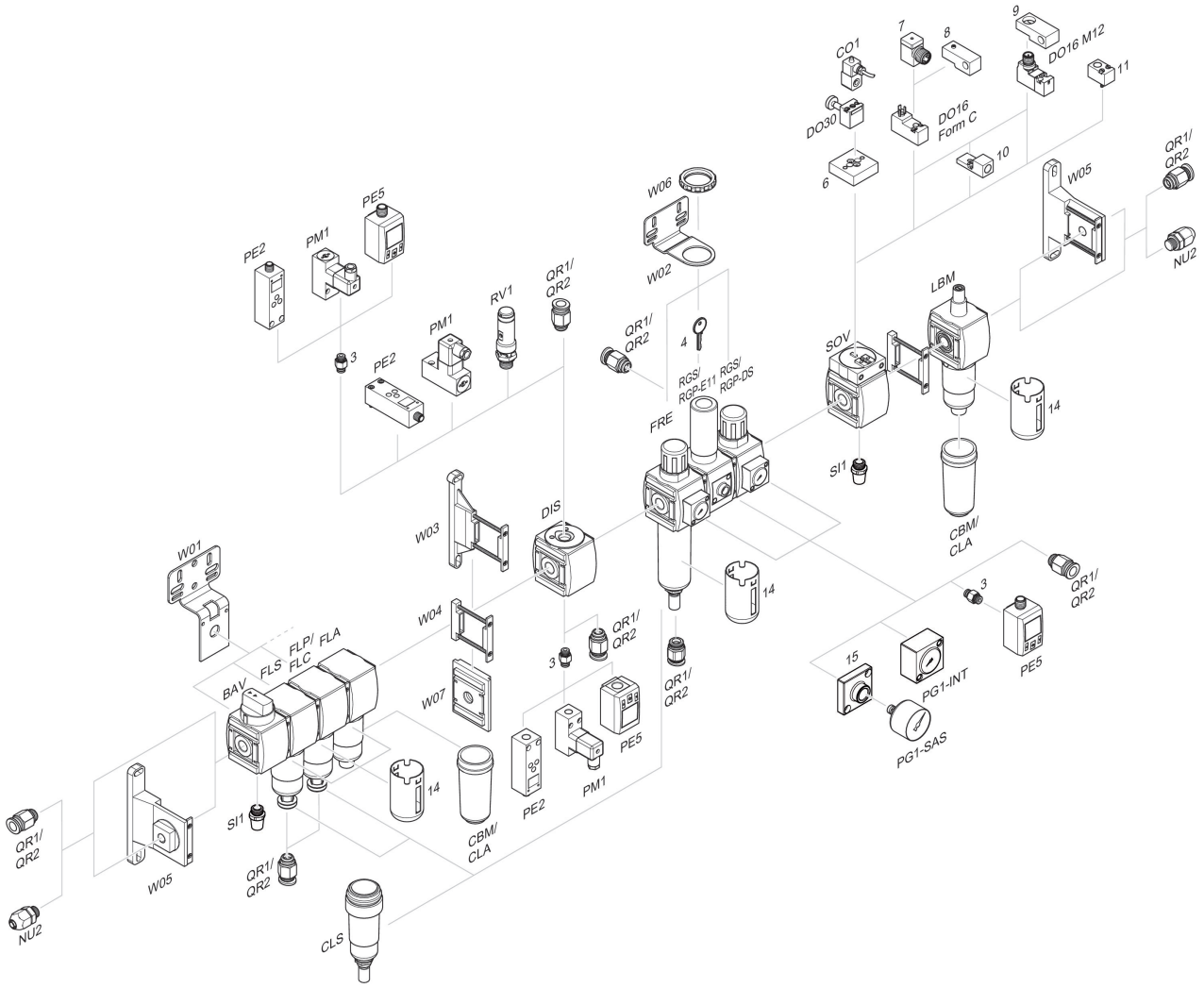

3 = Double nipple 4 = Key for E11 locking 6 = Transition plate DO30 7 = Adapter, Series CON-VP 8 = Mounting aid DO16, form C 9 = Mounting aid DO16, M12 10 = Adapter for external pilot air 11 = Adapter pneumatic operation 14 = Protective guard 15 = Transition plate for assembling a pressure gauge with connection thread G 1/8

Flow rate characteristic, p2 = 0,05 - 7 bar

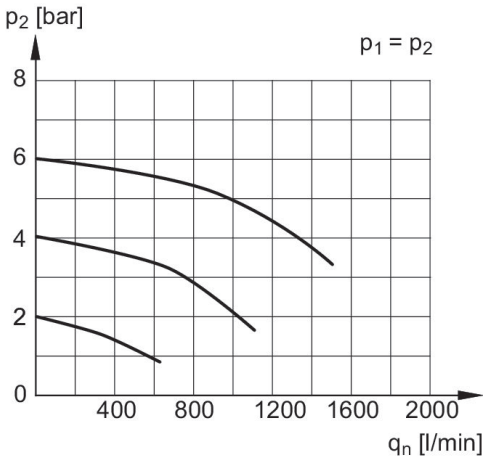

p1 = Working pressure
p2 = Secondary pressure
qn = Nominal flow