Multipole plug, series CON-MP

R412011249

AVENTICS Series CON-MP Multipole plugs with cable

The AVENTICS Series CON-MP-with cable offers cables with a multipol plug like D-SUB with various numbers of pins and different length, optimized for our focused valve system Series like AV Also C/2 connectors for Valve systems of Series CL03 are available.

- Multipole plug connectors with connected cable
- Valve system control, D-Sub plug



Technical data

Industry	Industrial
Note	D-Sub socket, 25 pin angled
Type	Multipole
Cable	with cable
Operational voltage	24 V DC
Electrical connection 1, type	Socket
Electrical connection 1, thread size	D-Sub
Electrical connection 1, number of poles	25-pin
Cable exit 1	angled
Cable exit angle	90°
Electrical connection 2, type	open cable ends
Electrical connection 2, number of poles	25-pin
Shielding	unshielded
Cable length L	5 m
Certificates	UL (Underwriters Laboratories)
Protection class	IP65
Min. ambient temperature	-5 °C
Max. ambient temperature	50 °C
Max. current	3 A

Multipole plug, series CON-MP

R412011249

Wire cross-section	0.34 mm²
Cable-Ø	11.2 mm
Weight	1.065 kg

Material

Housing material	Polyamide
Material cable sheath	Polyvinyl chloride
Part No.	R412011249

Technical information

The specified protection class is only valid in assembled and tested state.

Note for use with VS LP04: The plug can only be used in the LP04 versions with a side electrical connection.

Dimensions

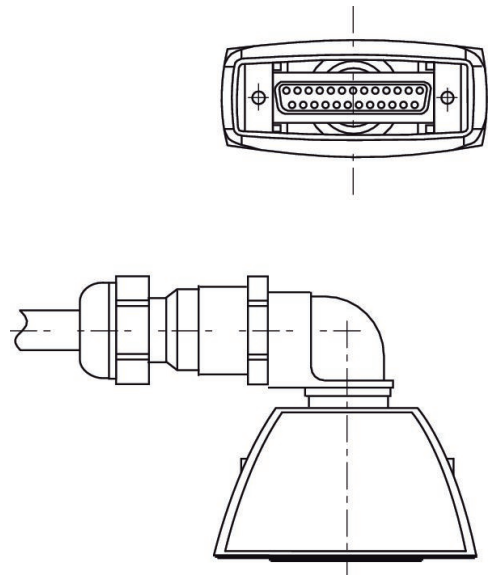

PIN assignment and cable colors

cable identification as per DIN 47100

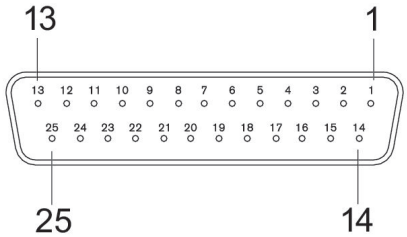

Multipole plug, series CON-MP

R412011249

Socket

D-Sub socket, 25 pin

Pin	1	2	3	4	5	6	7	8	9	10
Color	white	brown	green	yellow	gray	pink	blue	red	black	violet

Pin	11	12	13	14	15	16	17	18	19	20
Color	gray/pink	red/blue	white/green	brown/ green	white/yellow	yel- low/brown	white/gray	gray/brown	white/pink	pink/brown

Pin	21	22	23	24	25
Color	white/blue	brown/blue	white/red	brown/red	white/black