Pressure gauge, Series PG1-SFB

R412010679

Series PG1 Pressure gauges

With the AVENTICS Series PG1 you can visualize and rely on a clear air pressure display for each of your pneumatic circuits. In addition to the parameters for controlling the air quality, supplying sufficient pressure is the basis for operating a reliable system within machine automation. Emerson offers mechanical pressure gauges that can be integrated into machines for diverse applications and air preparation systems. The specifications of the individual versions in the universal PG1 Series provide a selection of options, such as appearance, material, or the required type of mounting.

- Clearly visible pressure indicators in different sizes and versions
- Gauges available with or without adjustable work area display
- Special gauges available like glycerine filled gauges or stainless-steel housing





Technical data

Industry	Industrial
Pressure gauge version	Bourdon tube pressure gauge Back port
Standardization	EN 837-1
Class	2,5
Protection class according to EN 60529	IP54
Compressed air connection	R 1/8
Nominal diameter	50 mm
Scale value	0.2
pointer	Stainless Steel
Min. range of application	0 bar
Max. range of application	10 bar
Min. display range	0 bar
Max. display range	12 bar
Min. working pressure	0 bar
Max. working pressure	12 bar
Min. ambient temperature	-25 °C
Max. ambient temperature	60 °C
Medium	Compressed air
Background color	White

Pressure gauge, Series PG1-SFB

R412010679

Main scale unit (outside)	bar
Main scale color (outside)	Black
Secondary scale unit (inside)	psi
Secondary scale color (inside)	Grey
Pointer color	Black
Weight	0.091 kg

Material

Housing material	Stainless Steel
Material viewing window	Safety glass
Material thread	Stainless Steel
	R412010679

Dimensions in mm

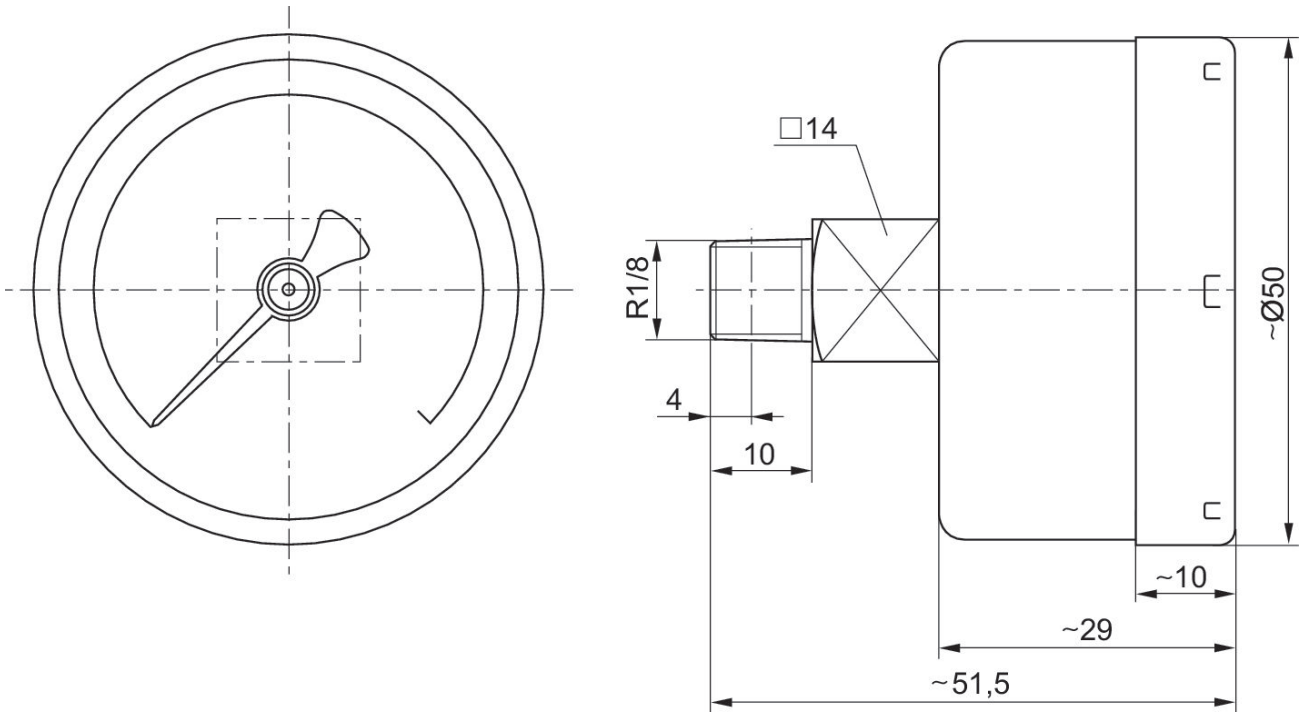

Safety glass viewing window