Clamping flange

R412010348

AVENTICS Flange mountings



Technical data

Industry	Industrial
Version	SA1-MA-33
Delivery unit	1 piece
Weight	0.45 kg

Material

Screws material	Steel, chrome-plated
Surface screws	galvanized
Material clamping flange	Steel, chrome-plated
Surface clamping flange	salt bath nitrocarburized
Part No.	R412010348

Clamping flange

R412010348

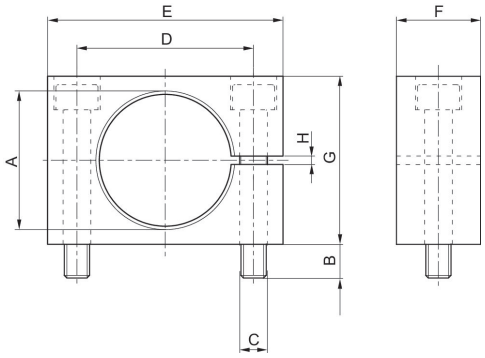

Part No.	A	B	C	D	E	F	G	H
R412010348	M33x1,5	8	M6x40	42	56	20	40	2
R412010349	M64x2	12	M10x80	78	100	25	80	2