# Pressure regulator, Series AS5-RGS

**R412009115**

2026-07-08

## Series AS5

The AVENTICS Series AS5 is a modular, versatile maintenance unit for universal application. This Series offers compact dimensions, is highly efficient, lightweight and easy-to-use. The AVENTICS Series AS guarantees reliability, safety, and efficiency with a simplified assembly and maintenance efforts.



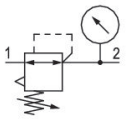


## Technical data

| | |
|---|---|
| Industry | Industrial |
| Note | Archive product: Do not use in new constructions! |
| Function | Standard pressure regulator |
| Parts | Pressure regulator |
| Pressure gauge | with pressure gauge |
| Mounting orientation | Any |
| Regulator type | Diaphragm-type pressure regulator |
| Port | G 1 |
| Nominal flow Qn | 14500 l/min |
| Min. regulation range | 0.1 bar |
| Max. regulation range | 2 bar |
| Min. working pressure | 0.1 bar |
| Max. working pressure | 16 bar |
| Min. ambient temperature | -10 °C |
| Max. ambient temperature | 50 °C |
| Activation | Mechanical |
| Regulator function | with relieving air exhaust |
| Regulator type | Can be assembled into blocks |
| Pressure supply | single |
| Lock type | for padlocks |
| Max. internal air consumption $q_v$ | 1.5 l/min |
| Medium | Compressed air<br>Neutral gases |

| | |
|---|---|
| Min. medium temperature | -10 °C |
| Max. medium temperature | 50 °C |
| Weight | 0.997 kg |

## Material

| | |
|---|---|
| Housing material | Polyamide |
| Material front plate | Acrylonitrile butadiene styrene |
| Seal material | Acrylonitrile butadiene rubber |
| Material threaded bushing | Die cast zinc |
| Part No. | R412009115 |

## Technical information

The pressure dew point must be at least 15 °C less than ambient and medium temperature and may not exceed 3 °C.

Nominal flow Qn with secondary pressure p2 = 6 bar at Δp = 1 bar

The rear pressure gauge connection on the pressure regulator is closed with a blanking plug, the front connection is open. Depending on the customer application, a second blanking plug may be necessary. Please order separately (see accessories).

A change in the flow direction (from air supply on the left to air supply on the right) occurs by rotating installation by 180° about the vertical axis. Please see the operating instructions for further details.

Relieving exhaust (≤ 0.3 bar over set pressure)

With rear exhaust (>3 bar)

Pressure gauge enclosed separately

# Pressure regulator, Series AS5-RGS

R412009115

2026-07-08

## Pressure characteristics curve

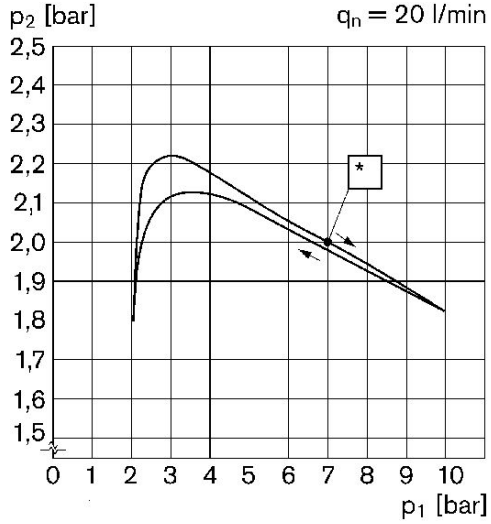


p1 = Working pressure
p2 = Secondary pressure
qn = Nominal flow
* starting point

## Flow rate characteristic (setting range p2: 0.5 - 8 bar)

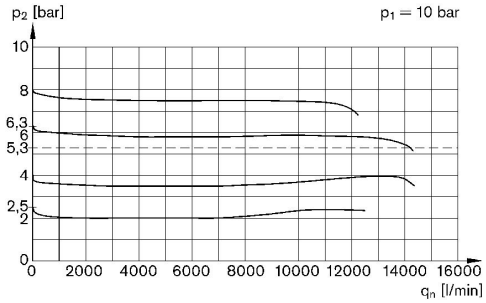


p1 = Working pressure
p2 = Secondary pressure
qn = Nominal flow

## Dimensions

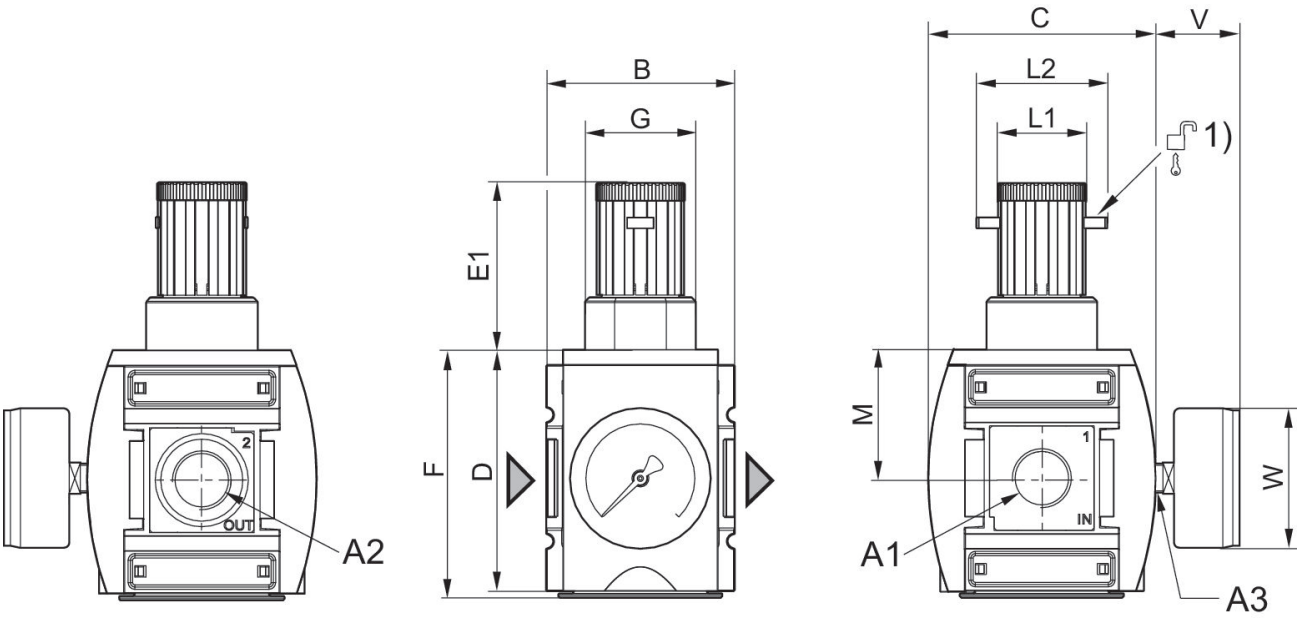


A1 = input A2 = output A3 = pressure gauge connection
1) Mounting option for padlocks, max. shackle Ø 8

## Dimensions in mm

| Part No. | A1 | A2 | A3 | B | C | D | E1 | F | G | L1 |
|---|---|---|---|---|---|---|---|---|---|---|
| R412009101 | G 3/4 | G 3/4 | G 1/4 | 85 | 103 | 109 | 75 | 112 | M50x1,5 | 41 |
| R412009103 | G 3/4 | G 3/4 | G 1/4 | 85 | 103 | 109 | 75 | 112 | M50x1,5 | 41 |
| R412009105 | G 3/4 | G 3/4 | G 1/4 | 85 | 103 | 109 | 75 | 112 | M50x1,5 | 41 |
| R412009107 | G 3/4 | G 3/4 | G 1/4 | 85 | 103 | 109 | 75 | 112 | M50x1,5 | 41 |
| R412009109 | G 3/4 | G 3/4 | G 1/4 | 85 | 103 | 109 | 75 | 112 | M50x1,5 | 41 |
| R412009111 | G 3/4 | G 3/4 | G 1/4 | 85 | 103 | 109 | 75 | 112 | M50x1,5 | 41 |
| R412009113 | G 1 | G 1 | G 1/4 | 85 | 103 | 109 | 75 | 112 | M50x1,5 | 41 |
| **R412009115** | G 1 | G 1 | G 1/4 | 85 | 103 | 109 | 75 | 112 | M50x1,5 | 41 |
| R412009117 | G 1 | G 1 | G 1/4 | 85 | 103 | 109 | 75 | 112 | M50x1,5 | 41 |
| R412009119 | G 1 | G 1 | G 1/4 | 85 | 103 | 109 | 75 | 112 | M50x1,5 | 41 |
| R412009121 | G 1 | G 1 | G 1/4 | 85 | 103 | 109 | 75 | 112 | M50x1,5 | 41 |
| R412009123 | G 1 | G 1 | G 1/4 | 85 | 103 | 109 | 75 | 112 | M50x1,5 | 41 |
| R412009100 | G 3/4 | G 3/4 | G 1/4 | 85 | 103 | 109 | 75 | 112 | M50x1,5 | 41 |
| R412009102 | G 3/4 | G 3/4 | G 1/4 | 85 | 103 | 109 | 75 | 112 | M50x1,5 | 41 |
| R412009104 | G 3/4 | G 3/4 | G 1/4 | 85 | 103 | 109 | 75 | 112 | M50x1,5 | 41 |
| R412009106 | G 3/4 | G 3/4 | G 1/4 | 85 | 103 | 109 | 75 | 112 | M50x1,5 | 41 |
| R412009108 | G 3/4 | G 3/4 | G 1/4 | 85 | 103 | 109 | 75 | 112 | M50x1,5 | 41 |
| R412009110 | G 3/4 | G 3/4 | G 1/4 | 85 | 103 | 109 | 75 | 112 | M50x1,5 | 41 |
| R412009112 | G 1 | G 1 | G 1/4 | 85 | 103 | 109 | 75 | 112 | M50x1,5 | 41 |
| R412009114 | G 1 | G 1 | G 1/4 | 85 | 103 | 109 | 75 | 112 | M50x1,5 | 41 |
| R412009116 | G 1 | G 1 | G 1/4 | 85 | 103 | 109 | 75 | 112 | M50x1,5 | 41 |
| R412009118 | G 1 | G 1 | G 1/4 | 85 | 103 | 109 | 75 | 112 | M50x1,5 | 41 |
| R412009120 | G 1 | G 1 | G 1/4 | 85 | 103 | 109 | 75 | 112 | M50x1,5 | 41 |
| R412009122 | G 1 | G 1 | G 1/4 | 85 | 103 | 109 | 75 | 112 | M50x1,5 | 41 |

# Pressure regulator, Series AS5-RGS

R412009115

2026-07-08

| Part No. | L2 | M | V | W |
|---|---|---|---|---|
| R412009101 | 60 | 58 | 38 | 63 |
| R412009103 | 60 | 58 | 38 | 63 |
| R412009105 | 60 | 58 | 38 | 63 |
| R412009107 | 60 | 58 | 38 | 63 |
| R412009109 | 60 | 58 | 38 | 63 |
| R412009111 | 60 | 58 | 38 | 63 |
| R412009113 | 60 | 58 | 38 | 63 |
| **R412009115** | 60 | 58 | 38 | 63 |
| R412009117 | 60 | 58 | 38 | 63 |
| R412009119 | 60 | 58 | 38 | 63 |
| R412009121 | 60 | 58 | 38 | 63 |
| R412009123 | 60 | 58 | 38 | 63 |
| R412009100 | 60 | 58 | 38 | 63 |
| R412009102 | 60 | 58 | 38 | 63 |
| R412009104 | 60 | 58 | 38 | 63 |
| R412009106 | 60 | 58 | 38 | 63 |
| R412009108 | 60 | 58 | 38 | 63 |
| R412009110 | 60 | 58 | 38 | 63 |
| R412009112 | 60 | 58 | 38 | 63 |
| R412009114 | 60 | 58 | 38 | 63 |
| R412009116 | 60 | 58 | 38 | 63 |
| R412009118 | 60 | 58 | 38 | 63 |
| R412009120 | 60 | 58 | 38 | 63 |
| R412009122 | 60 | 58 | 38 | 63 |

# Pressure regulator, Series AS5-RGS

R412009115

2026-07-08

## Accessories overview

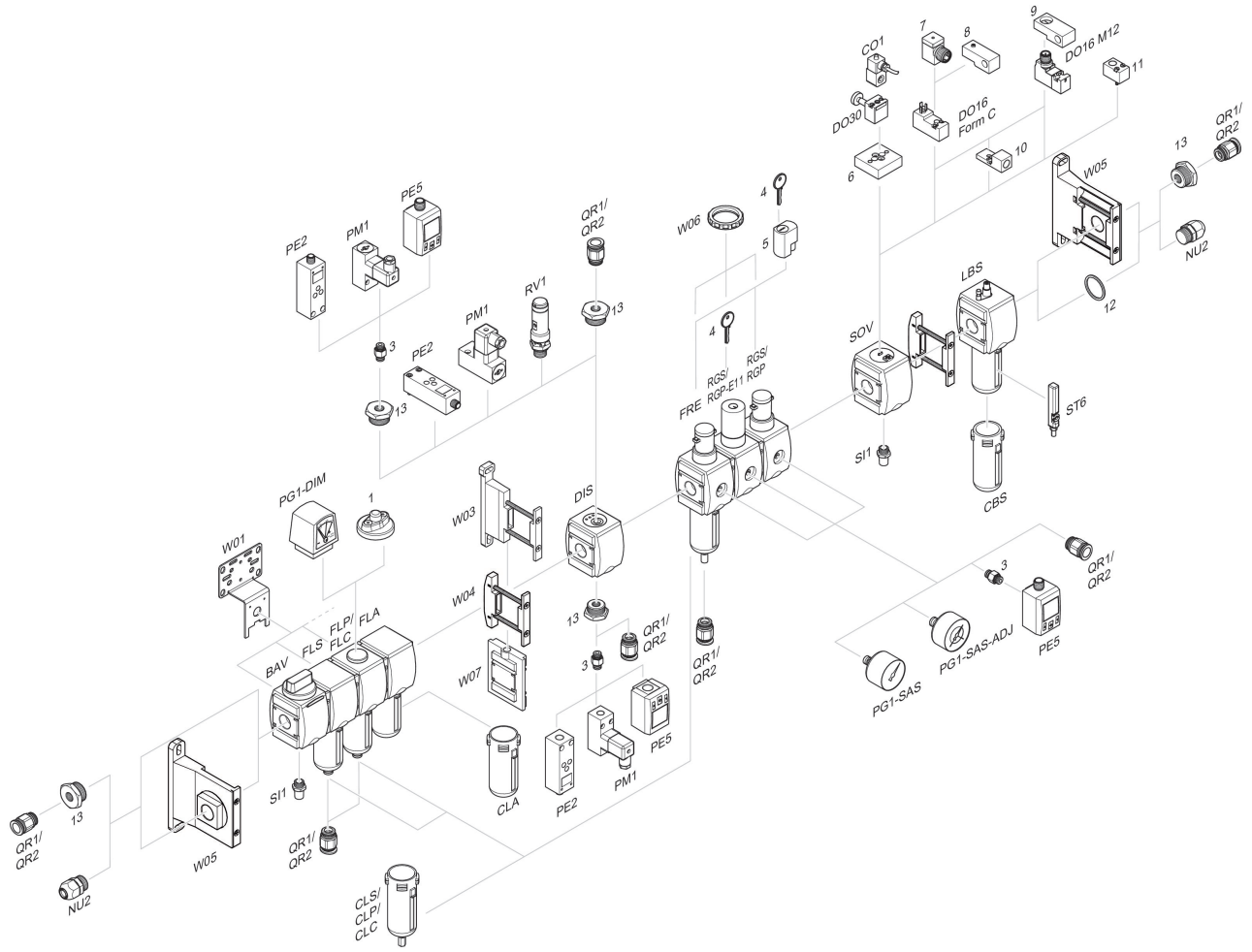


1 = contamination display 3 = Double nipple 4 = Key for E11 locking 5 = mortise lock 6 = Transition plate DO30 7 = Adapter, Series CON-VP 8 = Mounting aid DO16, form C 9 = Mounting aid DO16, M12 10 = Adapter for external pilot air 11 = Adapter pneumatic operation 12 = Sealing ring 13 = Reducing nipple