Pressure regulator, Series AS5-RGS

R412009103

2026-07-08

Series AS5

The AVENTICS Series AS5 is a modular, versatile maintenance unit for universal application. This Series offers compact dimensions, is highly efficient, lightweight and easy-to-use. The AVENTICS Series AS guarantees reliability, safety, and efficiency with a simplified assembly and maintenance efforts.



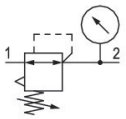

Technical data

Industry	Industrial
Note	Archive product: Do not use in new constructions!
Function	Standard pressure regulator
Parts	Pressure regulator
Pressure gauge	with pressure gauge
Mounting orientation	Any
Regulator type	Diaphragm-type pressure regulator
Port	G 3/4
Nominal flow Qn	14500 l/min
Min. regulation range	0.1 bar
Max. regulation range	2 bar
Min. working pressure	0.1 bar
Max. working pressure	16 bar
Min. ambient temperature	-10 °C
Max. ambient temperature	50 °C
Activation	Mechanical
Regulator function	with relieving air exhaust
Regulator type	Can be assembled into blocks
Pressure supply	single
Lock type	for padlocks
Max. internal air consumption q_v	1.5 l/min
Medium	Compressed air Neutral gases

Min. medium temperature	-10 °C
Max. medium temperature	50 °C
Weight	0.997 kg

Material

Housing material	Polyamide
Material front plate	Acrylonitrile butadiene styrene
Seal material	Acrylonitrile butadiene rubber
Material threaded bushing	Die cast zinc
Part No.	R412009103

Technical information

The pressure dew point must be at least 15 °C less than ambient and medium temperature and may not exceed 3 °C.

Nominal flow Qn with secondary pressure p2 = 6 bar at Δp = 1 bar

The rear pressure gauge connection on the pressure regulator is closed with a blanking plug, the front connection is open. Depending on the customer application, a second blanking plug may be necessary. Please order separately (see accessories).

A change in the flow direction (from air supply on the left to air supply on the right) occurs by rotating installation by 180° about the vertical axis. Please see the operating instructions for further details.

Relieving exhaust (≤ 0.3 bar over set pressure)

With rear exhaust (>3 bar)

Pressure gauge enclosed separately

Pressure regulator, Series AS5-RGS

R412009103

2026-07-08

Pressure characteristics curve

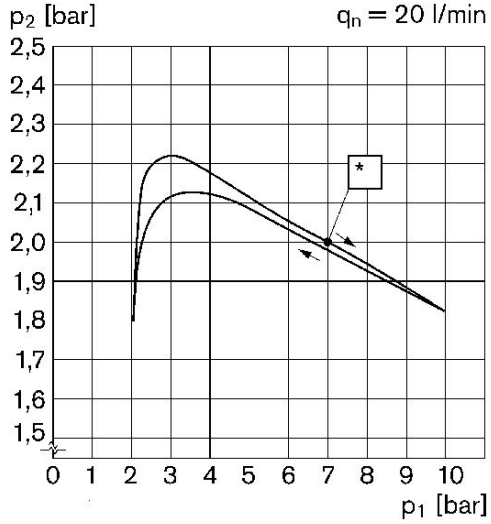

p1 = Working pressure
p2 = Secondary pressure
qn = Nominal flow
* starting point

Flow rate characteristic (setting range p2: 0.5 - 8 bar)

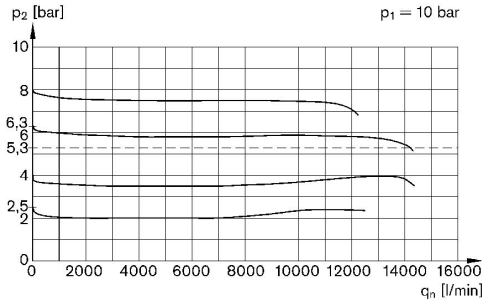

p1 = Working pressure
p2 = Secondary pressure
qn = Nominal flow

Dimensions

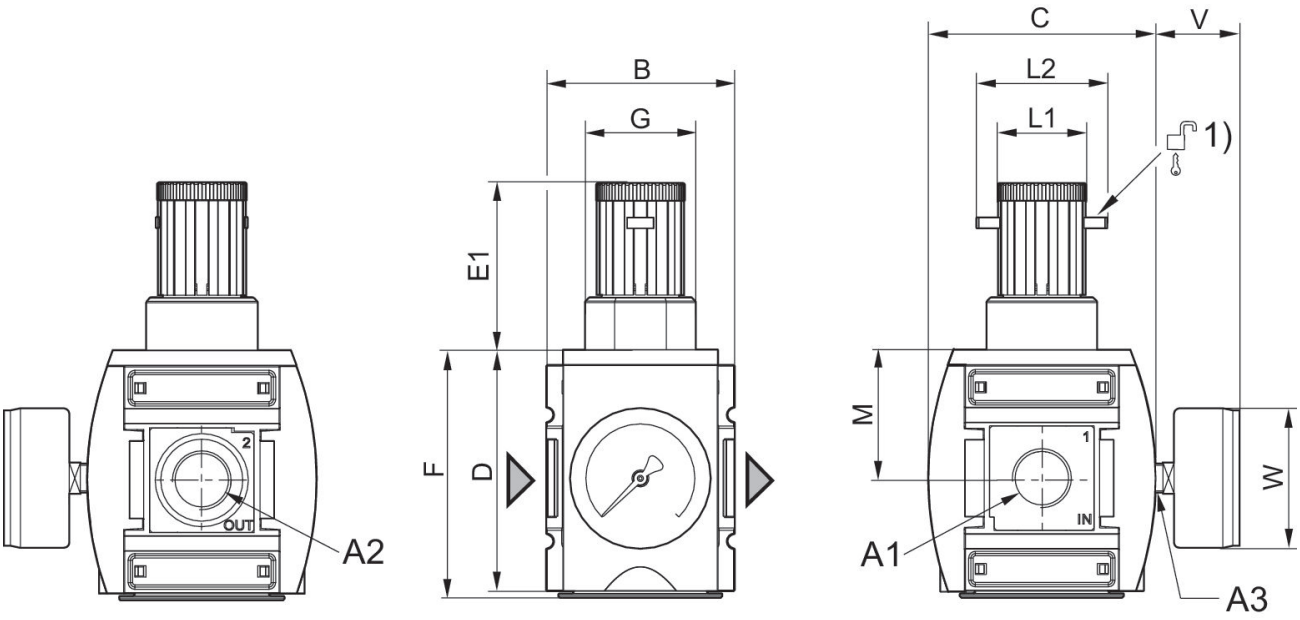

A1 = input A2 = output A3 = pressure gauge connection
1) Mounting option for padlocks, max. shackle Ø 8

Dimensions in mm

Part No.	A1	A2	A3	B	C	D	E1	F	G	L1
R412009101	G 3/4	G 3/4	G 1/4	85	103	109	75	112	M50x1,5	41
R412009103	G 3/4	G 3/4	G 1/4	85	103	109	75	112	M50x1,5	41
R412009105	G 3/4	G 3/4	G 1/4	85	103	109	75	112	M50x1,5	41
R412009107	G 3/4	G 3/4	G 1/4	85	103	109	75	112	M50x1,5	41
R412009109	G 3/4	G 3/4	G 1/4	85	103	109	75	112	M50x1,5	41
R412009111	G 3/4	G 3/4	G 1/4	85	103	109	75	112	M50x1,5	41
R412009113	G 1	G 1	G 1/4	85	103	109	75	112	M50x1,5	41
R412009115	G 1	G 1	G 1/4	85	103	109	75	112	M50x1,5	41
R412009117	G 1	G 1	G 1/4	85	103	109	75	112	M50x1,5	41
R412009119	G 1	G 1	G 1/4	85	103	109	75	112	M50x1,5	41
R412009121	G 1	G 1	G 1/4	85	103	109	75	112	M50x1,5	41
R412009123	G 1	G 1	G 1/4	85	103	109	75	112	M50x1,5	41
R412009100	G 3/4	G 3/4	G 1/4	85	103	109	75	112	M50x1,5	41
R412009102	G 3/4	G 3/4	G 1/4	85	103	109	75	112	M50x1,5	41
R412009104	G 3/4	G 3/4	G 1/4	85	103	109	75	112	M50x1,5	41
R412009106	G 3/4	G 3/4	G 1/4	85	103	109	75	112	M50x1,5	41
R412009108	G 3/4	G 3/4	G 1/4	85	103	109	75	112	M50x1,5	41
R412009110	G 3/4	G 3/4	G 1/4	85	103	109	75	112	M50x1,5	41
R412009112	G 1	G 1	G 1/4	85	103	109	75	112	M50x1,5	41
R412009114	G 1	G 1	G 1/4	85	103	109	75	112	M50x1,5	41
R412009116	G 1	G 1	G 1/4	85	103	109	75	112	M50x1,5	41
R412009118	G 1	G 1	G 1/4	85	103	109	75	112	M50x1,5	41
R412009120	G 1	G 1	G 1/4	85	103	109	75	112	M50x1,5	41
R412009122	G 1	G 1	G 1/4	85	103	109	75	112	M50x1,5	41

Pressure regulator, Series AS5-RGS

R412009103

2026-07-08

Part No.	L2	M	V	W
R412009101	60	58	38	63
R412009103	60	58	38	63
R412009105	60	58	38	63
R412009107	60	58	38	63
R412009109	60	58	38	63
R412009111	60	58	38	63
R412009113	60	58	38	63
R412009115	60	58	38	63
R412009117	60	58	38	63
R412009119	60	58	38	63
R412009121	60	58	38	63
R412009123	60	58	38	63
R412009100	60	58	38	63
R412009102	60	58	38	63
R412009104	60	58	38	63
R412009106	60	58	38	63
R412009108	60	58	38	63
R412009110	60	58	38	63
R412009112	60	58	38	63
R412009114	60	58	38	63
R412009116	60	58	38	63
R412009118	60	58	38	63
R412009120	60	58	38	63
R412009122	60	58	38	63

Pressure regulator, Series AS5-RGS

R412009103

2026-07-08

Accessories overview

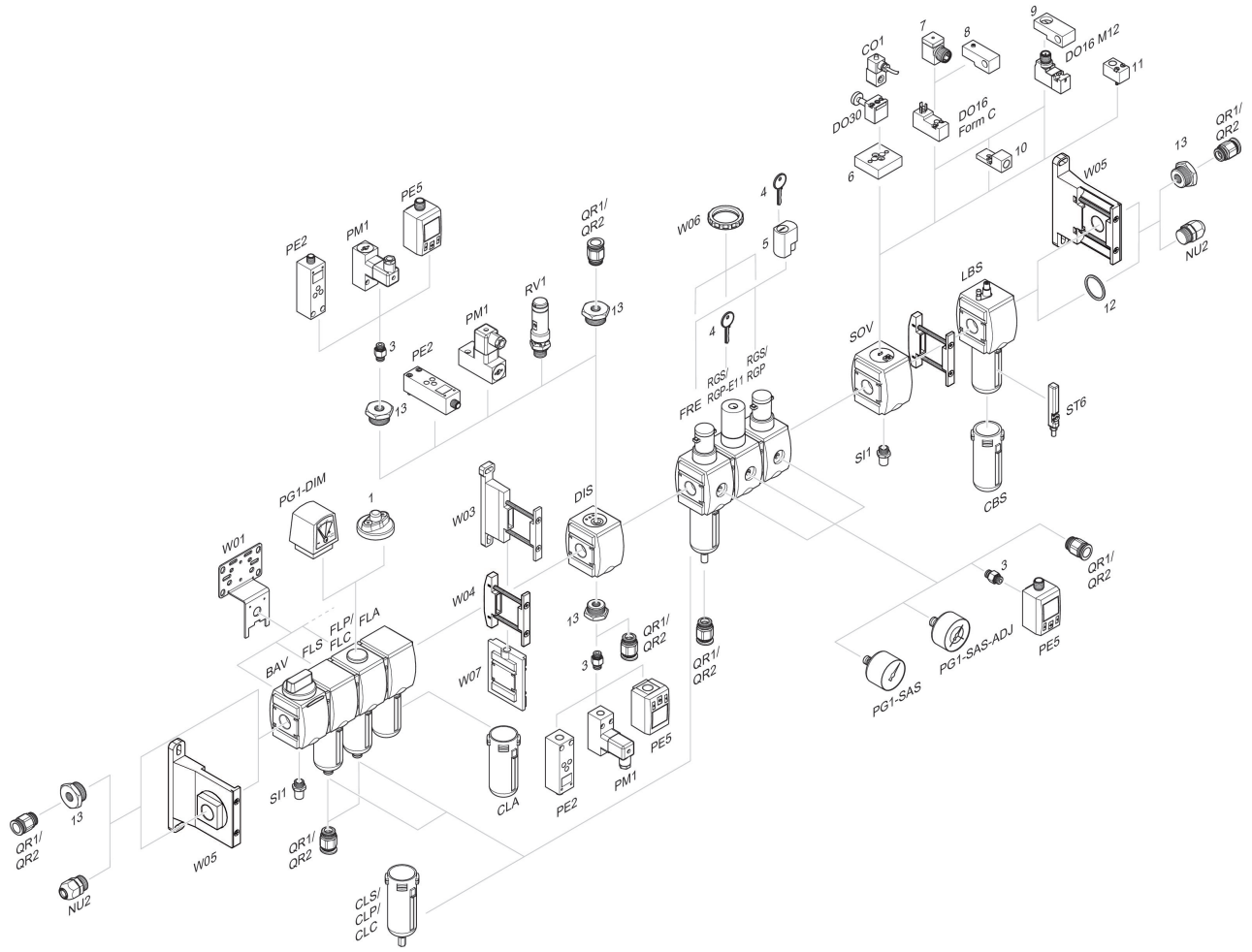

1 = contamination display 3 = Double nipple 4 = Key for E11 locking 5 = mortise lock 6 = Transition plate DO30 7 = Adapter, Series CON-VP 8 = Mounting aid DO16, form C 9 = Mounting aid DO16, M12 10 = Adapter for external pilot air 11 = Adapter pneumatic operation 12 = Sealing ring 13 = Reducing nipple