Pre-filter, Series AS5-FLP

R412009034

Series AS5

The AVENTICS Series AS5 is a modular, versatile maintenance unit for universal application. This Series offers compact dimensions, is highly efficient, lightweight and easy-to-use. The AVENTICS Series AS guarantees reliability, safety, and efficiency with a simplified assembly and maintenance efforts.

- Low weight



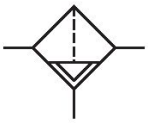

Technical data

Industry	Industrial
Note	Filter porosity: 0,3 µm Archive product: Do not use in new constructions!
Parts	Pre-filter
Reservoir	reservoir, polycarbonate, with PA protective guard
Port	G 1
Filter porosity	0.3 µm
Nominal flow Qn	2200 l/min
Condensate drain	fully automatic, open without pressure
Min. working pressure	1.5 bar
Max. working pressure	16 bar
Min. ambient temperature	-10 °C
Max. ambient temperature	50 °C
Medium	Compressed air Neutral gases
Max. achievable compressed air class acc. to ISO 8573-1:2010	2 : - : 3
Filter reservoir volume	87 cm³

Filter element	exchangeable
Recommended pre-filtering	5 µm
Weight	1.26 kg
Mounting orientation	vertical
Type	Can be assembled into blocks

Material

Housing material	Polyamide
Material front plate	Acrylonitrile butadiene styrene
Seal material	Acrylonitrile butadiene rubber
Material threaded bushing	Die cast zinc
Material reservoir	Die cast zinc
Material filter insert	Impregnated paper
Part No.	R412009034

Technical information

The pressure dew point must be at least 15 °C less than ambient and medium temperature and may not exceed 3 °C.

Note: Polycarbonate reservoirs are susceptible to solvents, supplementary information can be found at "Customer information".

A change in the flow direction (from air supply on the left to air supply on the right) occurs by rotating installation by 180° about the vertical axis. Please see the operating instructions for further details.

Flow rate characteristic, p2 = 0,05 - 7 bar

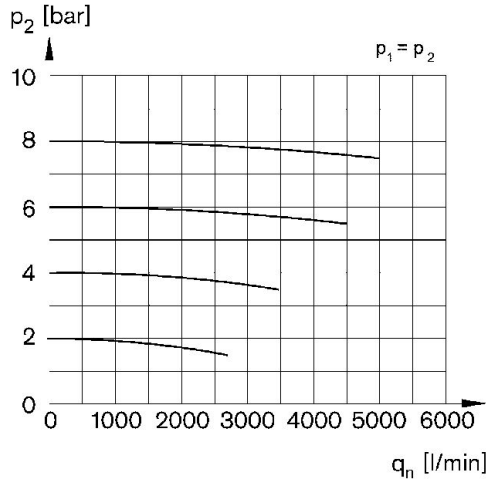

p1 = Working pressure p2 = Secondary pressure qn = Nominal flow

Dimensions

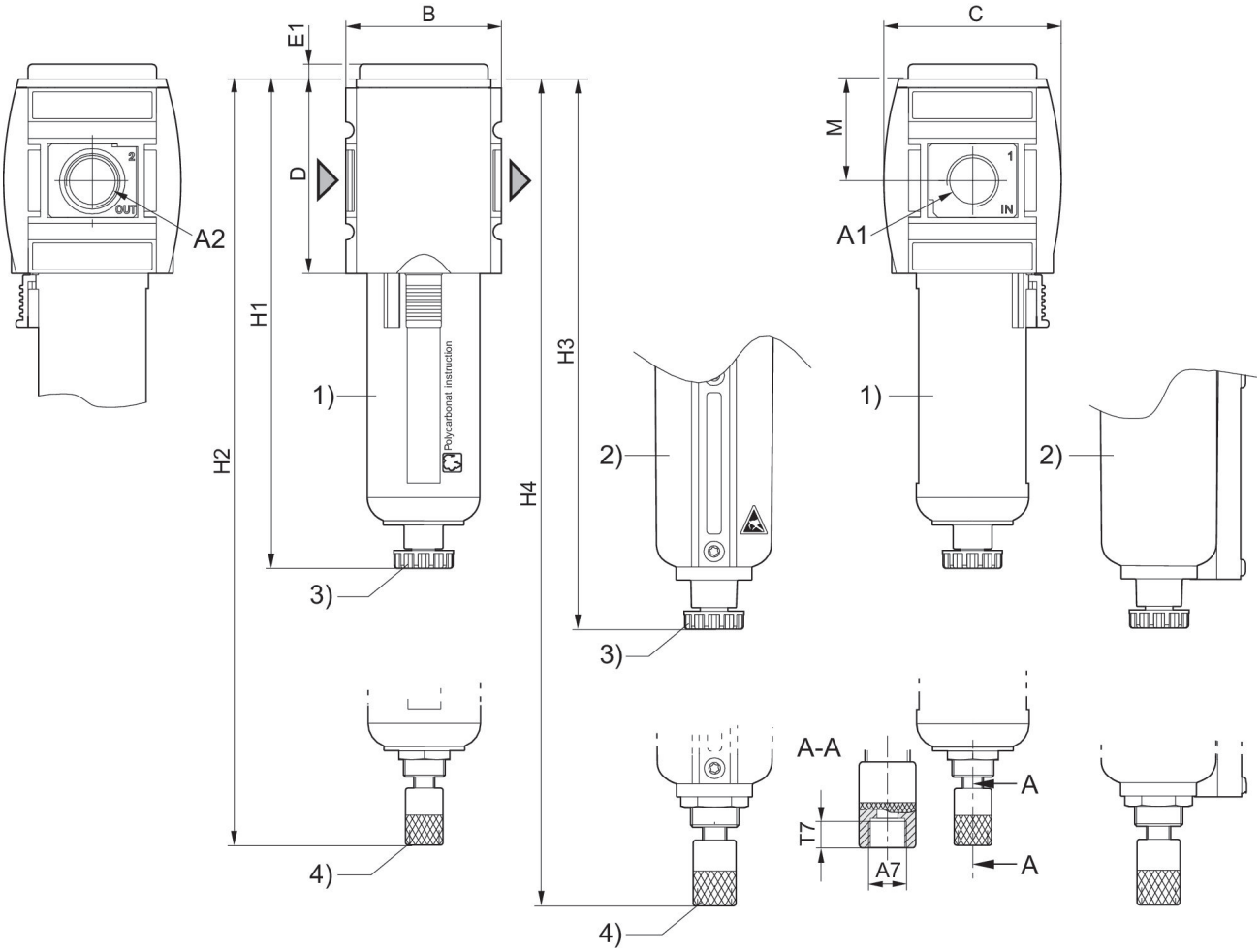

A1 = input A2 = output
A7 = condensate drain
1) Plastic reservoir and protective guard with window
2) Metal reservoir with inspection glass
3) Semi-automatic condensate drain
4) Fully automatic condensate drain

Dimensions in mm

Part No.	A1	A2	A7	B	C	D	E1	H1	H2	H3
R412009018	G 3/4	G 3/4	G 1/8	85	103	109	5	250	266	254
R412009019	G 3/4	G 3/4	G 1/8	85	103	109	5	250	266	254
R412009020	G 3/4	G 3/4	G 1/8	85	103	109	5	250	266	254
R412009024	G 3/4	G 3/4	G 1/8	85	103	109	5	250	266	254
R412009025	G 3/4	G 3/4	G 1/8	85	103	109	5	250	266	254
R412009026	G 3/4	G 3/4	G 1/8	85	103	109	5	250	266	254
R412009027	G 1	G 1	G 1/8	85	103	109	5	250	266	254
R412009028	G 1	G 1	G 1/8	85	103	109	5	250	266	254
R412009029	G 1	G 1	G 1/8	85	103	109	5	250	266	254
R412009033	G 1	G 1	G 1/8	85	103	109	5	250	266	254
R412009034	G 1	G 1	G 1/8	85	103	109	5	250	266	254
R412009035	G 1	G 1	G 1/8	85	103	109	5	250	266	254

Part No.	H4	M	T7
R412009018	270.5	58	8.5
R412009019	270.5	58	8.5
R412009020	270.5	58	8.5
R412009024	270.5	58	8.5
R412009025	270.5	58	8.5
R412009026	270.5	58	8.5
R412009027	270.5	58	8.5
R412009028	270.5	58	8.5
R412009029	270.5	58	8.5
R412009033	270.5	58	8.5
R412009034	270.5	58	8.5
R412009035	270.5	58	8.5

Accessories overview

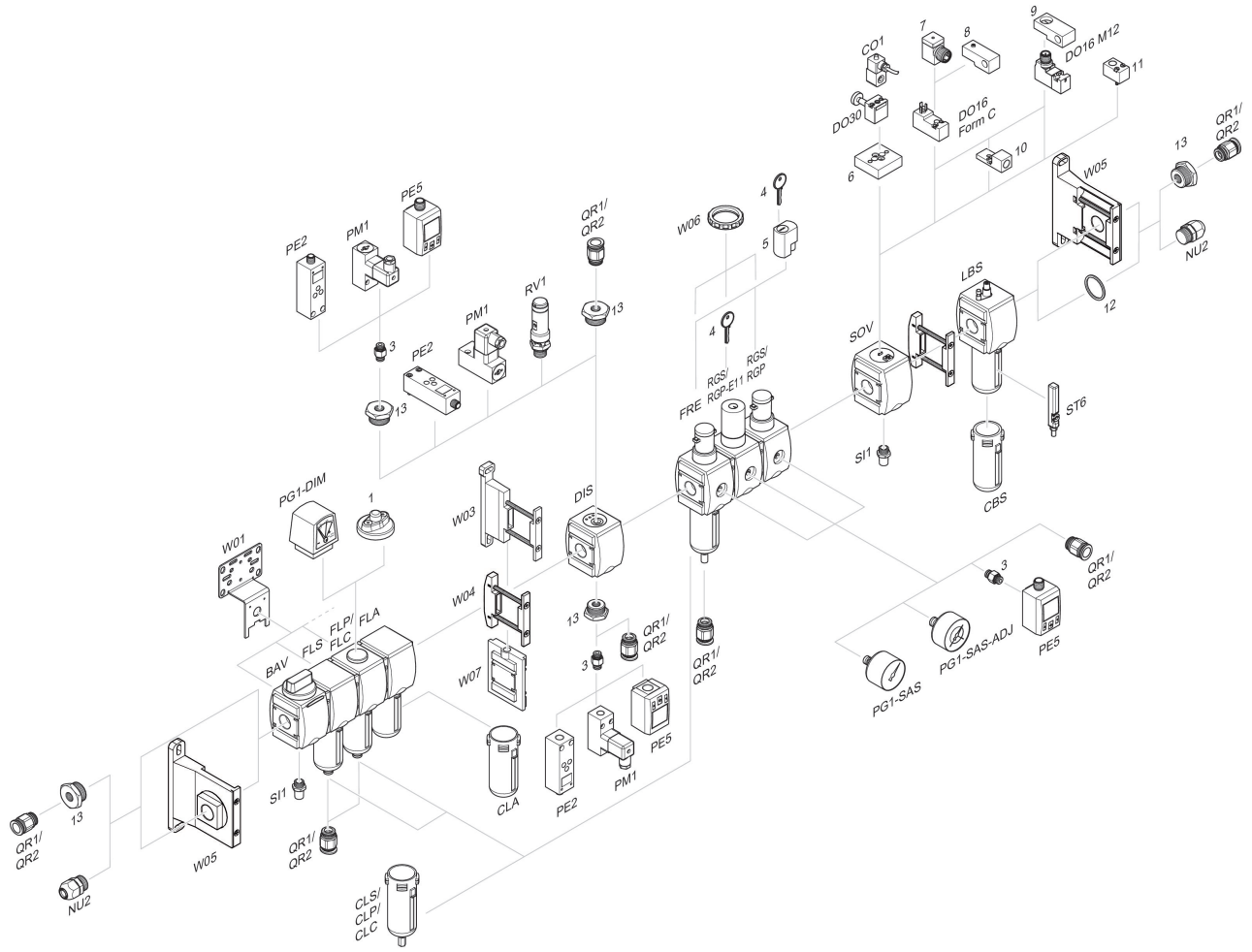

1 = contamination display 3 = Double nipple 4 = Key for E11 locking 5 = mortise lock 6 = Transition plate DO30 7 = Adapter, Series CON-VP 8 = Mounting aid DO16, form C 9 = Mounting aid DO16, M12 10 = Adapter for external pilot air 11 = Adapter pneumatic operation 12 = Sealing ring 13 = Reducing nipple