# Pre-filter, Series AS5-FLP

**R412009033**



## Series AS5

The AVENTICS Series AS5 is a modular, versatile maintenance unit for universal application. This Series offers compact dimensions, is highly efficient, lightweight and easy-to-use. The AVENTICS Series AS guarantees reliability, safety, and efficiency with a simplified assembly and maintenance efforts.

- Low weight




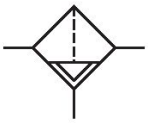

## Technical data

| | |
|---|---|
| Industry | Industrial |
| Note | Filter porosity: 0,3 µm<br>Archive product: Do not use in new constructions! |
| Parts | Pre-filter |
| Reservoir | reservoir, polycarbonate, with PA protective guard |
| Port | G 1 |
| Filter porosity | 0.3 µm |
| Nominal flow Qn | 2200 l/min |
| Condensate drain | semi-automatic, open without pressure |
| Min. working pressure | 1.5 bar |
| Max. working pressure | 16 bar |
| Min. ambient temperature | -10 °C |
| Max. ambient temperature | 50 °C |
| Medium | Compressed air<br>Neutral gases |
| Max. achievable compressed air class acc. to ISO 8573-1:2010 | 2 : - : 3 |
| Filter reservoir volume | 87 cm³ |

| | |
|---|---|
| Filter element | exchangeable |
| Recommended pre-filtering | 5 µm |
| Weight | 1.21 kg |
| Mounting orientation | vertical |
| Type | Can be assembled into blocks |

## Material

| | |
|---|---|
| Housing material | Polyamide |
| Material front plate | Acrylonitrile butadiene styrene |
| Seal material | Acrylonitrile butadiene rubber |
| Material threaded bushing | Die cast zinc |
| Material reservoir | Die cast zinc |
| Material filter insert | Impregnated paper |
| Part No. | R412009033 |

## Technical information

The pressure dew point must be at least 15 °C less than ambient and medium temperature and may not exceed 3 °C.

Note: Polycarbonate reservoirs are susceptible to solvents, supplementary information can be found at "Customer information".

A change in the flow direction (from air supply on the left to air supply on the right) occurs by rotating installation by 180° about the vertical axis. Please see the operating instructions for further details.

## Flow rate characteristic, p2 = 0,05 - 7 bar

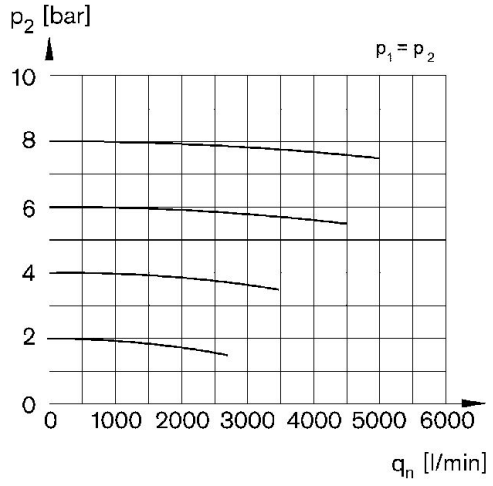


p1 = Working pressure p2 = Secondary pressure qn = Nominal flow

# Pre-filter, Series AS5-FLP

R412009033

## Dimensions

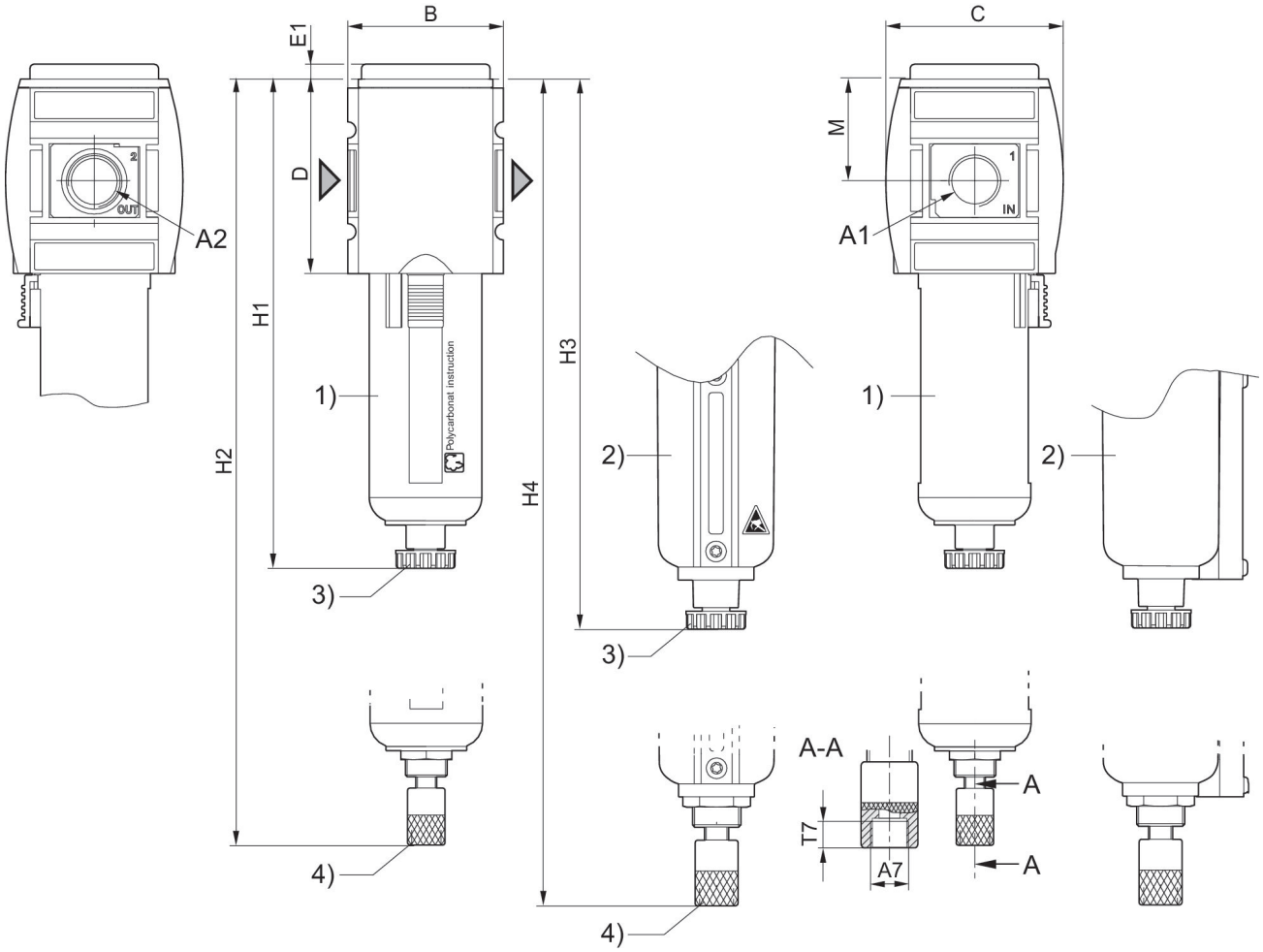


A1 = input A2 = output
A7 = condensate drain
1) Plastic reservoir and protective guard with window
2) Metal reservoir with inspection glass
3) Semi-automatic condensate drain
4) Fully automatic condensate drain

## Dimensions in mm

| Part No. | A1 | A2 | A7 | B | C | D | E1 | H1 | H2 | H3 |
|---|---|---|---|---|---|---|---|---|---|---|
| R412009018 | G 3/4 | G 3/4 | G 1/8 | 85 | 103 | 109 | 5 | 250 | 266 | 254 |
| R412009019 | G 3/4 | G 3/4 | G 1/8 | 85 | 103 | 109 | 5 | 250 | 266 | 254 |
| R412009020 | G 3/4 | G 3/4 | G 1/8 | 85 | 103 | 109 | 5 | 250 | 266 | 254 |
| R412009024 | G 3/4 | G 3/4 | G 1/8 | 85 | 103 | 109 | 5 | 250 | 266 | 254 |
| R412009025 | G 3/4 | G 3/4 | G 1/8 | 85 | 103 | 109 | 5 | 250 | 266 | 254 |
| R412009026 | G 3/4 | G 3/4 | G 1/8 | 85 | 103 | 109 | 5 | 250 | 266 | 254 |
| R412009027 | G 1 | G 1 | G 1/8 | 85 | 103 | 109 | 5 | 250 | 266 | 254 |
| R412009028 | G 1 | G 1 | G 1/8 | 85 | 103 | 109 | 5 | 250 | 266 | 254 |
| R412009029 | G 1 | G 1 | G 1/8 | 85 | 103 | 109 | 5 | 250 | 266 | 254 |
| **R412009033** | G 1 | G 1 | G 1/8 | 85 | 103 | 109 | 5 | 250 | 266 | 254 |
| R412009034 | G 1 | G 1 | G 1/8 | 85 | 103 | 109 | 5 | 250 | 266 | 254 |
| R412009035 | G 1 | G 1 | G 1/8 | 85 | 103 | 109 | 5 | 250 | 266 | 254 |

| Part No. | H4 | M | T7 |
|---|---|---|---|
| R412009018 | 270.5 | 58 | 8.5 |
| R412009019 | 270.5 | 58 | 8.5 |
| R412009020 | 270.5 | 58 | 8.5 |
| R412009024 | 270.5 | 58 | 8.5 |
| R412009025 | 270.5 | 58 | 8.5 |
| R412009026 | 270.5 | 58 | 8.5 |
| R412009027 | 270.5 | 58 | 8.5 |
| R412009028 | 270.5 | 58 | 8.5 |
| R412009029 | 270.5 | 58 | 8.5 |
| **R412009033** | 270.5 | 58 | 8.5 |
| R412009034 | 270.5 | 58 | 8.5 |
| R412009035 | 270.5 | 58 | 8.5 |

## Accessories overview

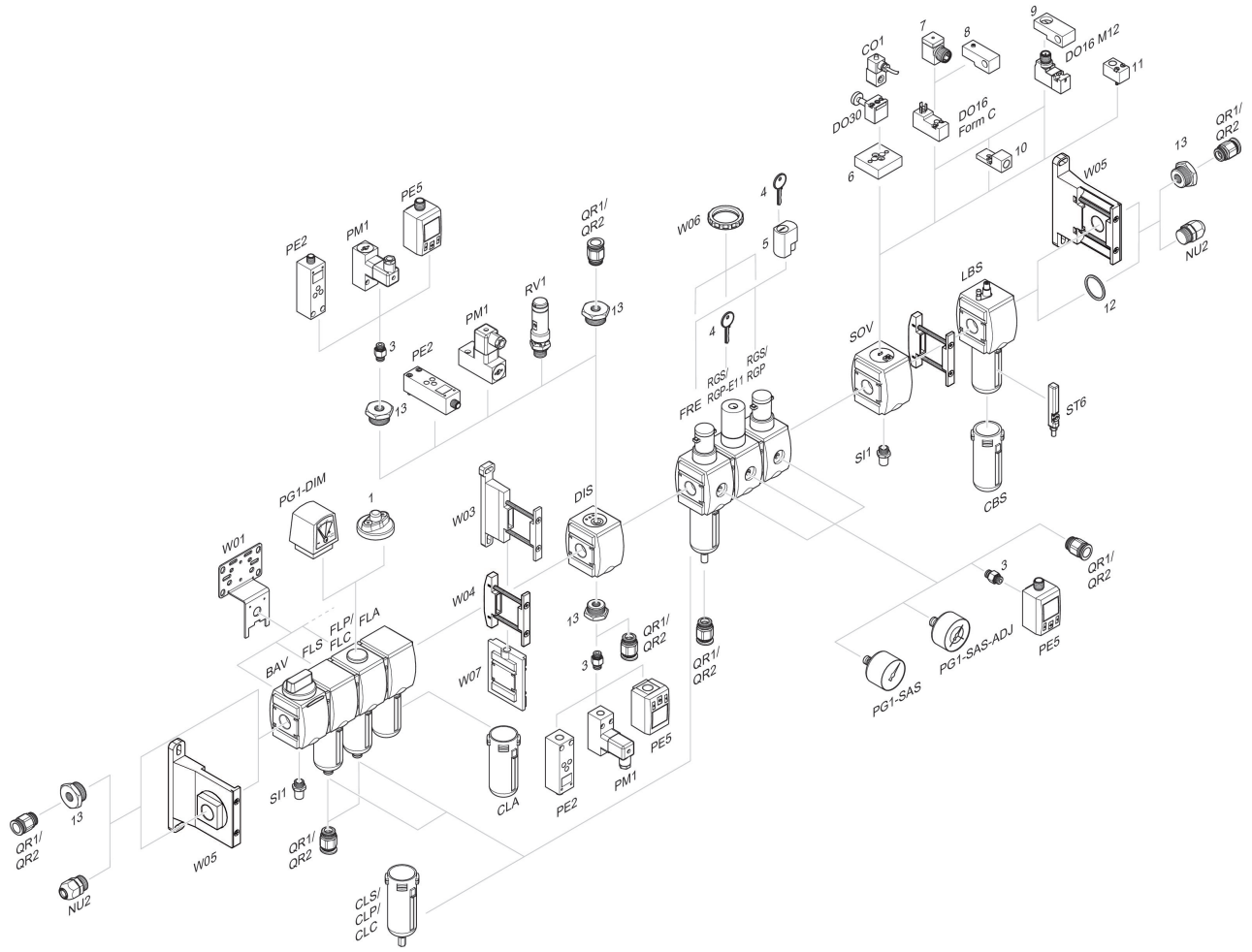


1 = contamination display 3 = Double nipple 4 = Key for E11 locking 5 = mortise lock 6 = Transition plate DO30 7 = Adapter, Series CON-VP 8 = Mounting aid DO16, form C 9 = Mounting aid DO16, M12 10 = Adapter for external pilot air 11 = Adapter pneumatic operation 12 = Sealing ring 13 = Reducing nipple