# Precision pressure regulator, Series AS3-RGP

**R412007136**



## Series AS3

The AVENTICS Series AS3 is a modular, versatile maintenance unit for universal application. This Series offers compact dimensions, is highly efficient, lightweight and easy-to-use. The AVENTICS Series AS guarantees reliability, safety, and efficiency with a simplified assembly and maintenance efforts.




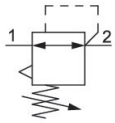


## Technical data

| | |
|---|---|
| Industry | Industrial |
| Note | Archive product: Do not use in new constructions! |
| Function | Precision pressure regulator |
| Parts | Precision pressure regulator |
| Pressure gauge | without pressure gauge |
| Mounting orientation | Any |
| Regulator type | Diaphragm-type pressure regulator |
| Port | G 3/8 |
| Nominal flow Qn | 1600 l/min |
| Min. regulation range | 0.1 bar |
| Max. regulation range | 1 bar |
| Min. working pressure | 0.1 bar |
| Max. working pressure | 16 bar |
| Min. ambient temperature | -10 °C |
| Max. ambient temperature | 50 °C |
| Activation | Mechanical |
| Regulator function | with relieving air exhaust |
| Regulator type | Can be assembled into blocks |
| Pressure supply | single |

| | |
|---|---|
| Lock type | for padlocks |
| Max. internal air consumption $q_v$ | 2.6 l/min |
| Medium | Compressed air<br>Neutral gases |
| Min. medium temperature | -10 °C |
| Max. medium temperature | 50 °C |
| Weight | 0.528 kg |

## Material

| | |
|---|---|
| Housing material | Polyamide |
| Material front plate | Acrylonitrile butadiene styrene |
| Seal material | Acrylonitrile butadiene rubber |
| Material threaded bushing | Die cast zinc |
| Part No. | R412007136 |

## Technical information

The pressure dew point must be at least 15 °C less than ambient and medium temperature and may not exceed 3 °C.

Nominal flow Qn with secondary pressure p2 = 6 bar at Δp = 1 bar

The rear pressure gauge connection on the pressure regulator is closed with a blanking plug, the front connection is open. Depending on the customer application, a second blanking plug may be necessary. Please order separately (see accessories).

A change in the flow direction (from air supply on the left to air supply on the right) occurs by rotating installation by 180° about the vertical axis. Please see the operating instructions for further details.

Recommended pre-filter: 5 µm

Order pressure gauge separately

## Dimensions in mm

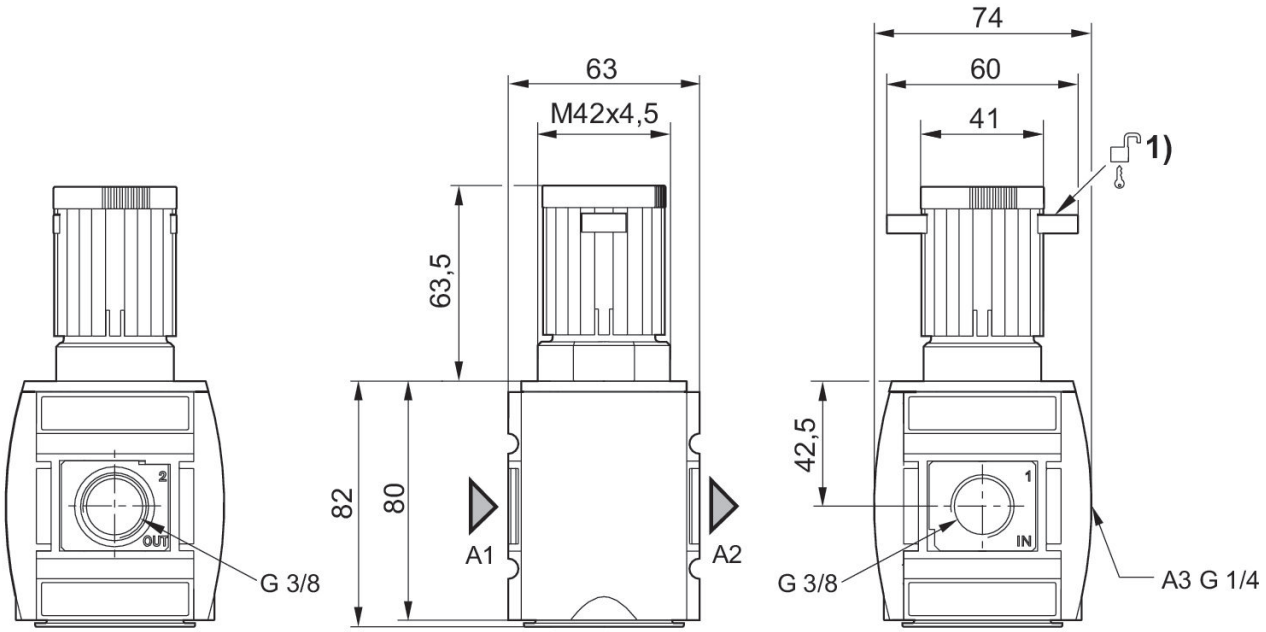


A1 = input
A2 = output
A3 = pressure gauge connection
1) Mounting option for padlocks, max. shackle Ø 8

# Precision pressure regulator, Series AS3-RGP

R412007136

2026-04-20

## Accessories overview

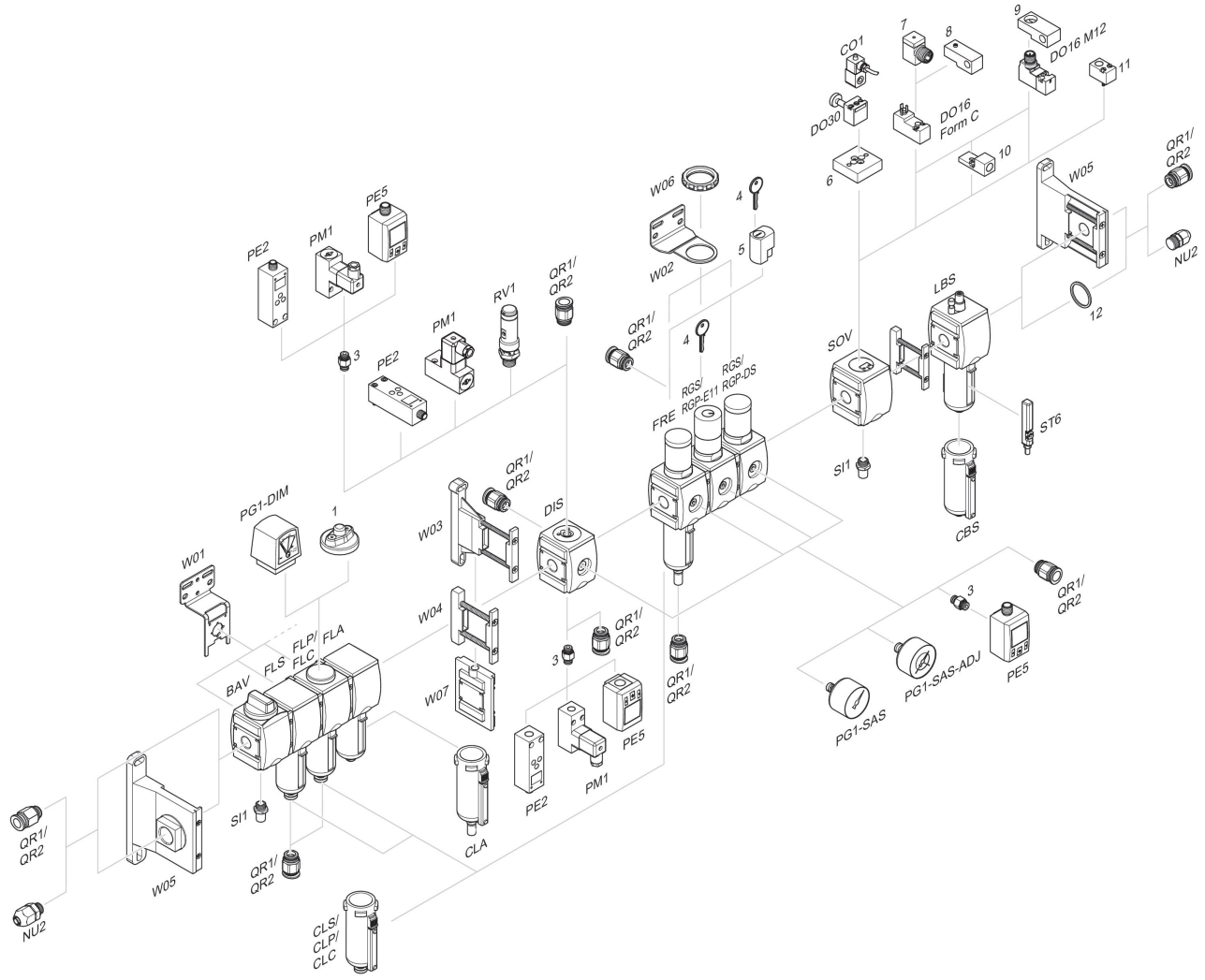


1 = contamination display 3 = Double nipple 4 = Key for E11 locking 5 = mortise lock 6 = Transition plate DO30 7 = Adapter, Series CON-VP 8 = Mounting aid DO16, form C 9 = Mounting aid DO16, M12 10 = Adapter for external pilot air 11 = Adapter pneumatic operation 12 = Sealing ring

## Pressure characteristics curve

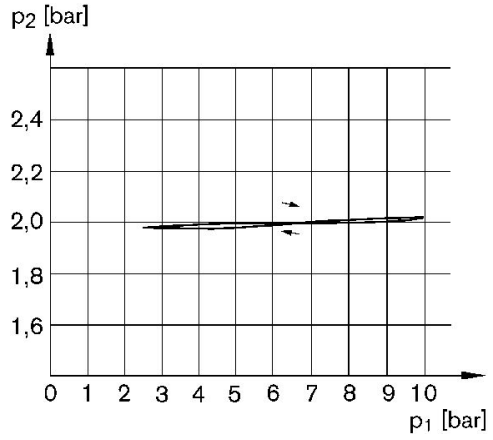


p1 = Working pressure
p2 = Secondary pressure

## Flow rate characteristic (p2: 0,5 - 8 bar)

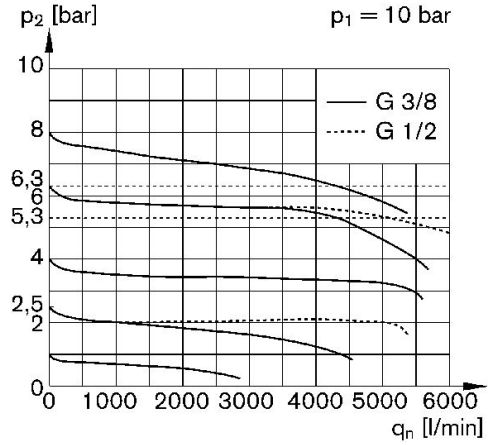


p1 = Working pressure
p2 = Secondary pressure
qn = Nominal flow