Filter, Series AS3-FLS

R412007014

Series AS3

The AVENTICS Series AS3 is a modular, versatile maintenance unit for universal application. This Series offers compact dimensions, is highly efficient, lightweight and easy-to-use. The AVENTICS Series AS guarantees reliability, safety, and efficiency with a simplified assembly and maintenance efforts.

- Low weight



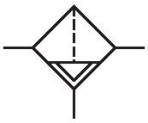

Technical data

Industry	Industrial
Note	Archive product: Do not use in new constructions!
Parts	Filter
Reservoir	reservoir, polycarbonate, with PA protective guard
Port	G 1/2
Nominal flow Qn	3500 l/min
Condensate drain	fully automatic, closed without pressure
Min. working pressure	1.5 bar
Max. working pressure	16 bar
Min. ambient temperature	-10 °C
Max. ambient temperature	50 °C
Medium	Compressed air Neutral gases
Max. achievable compressed air class acc. to ISO 8573-1:2010	7 : 7 : -
Filter reservoir volume	49 cm³
Filter element	exchangeable
Weight	0.41 kg

Mounting orientation	vertical
Type	Can be assembled into blocks

Material

Housing material	Polyamide
Material front plate	Acrylonitrile butadiene styrene
Seal material	Acrylonitrile butadiene rubber
Material threaded bushing	Die cast zinc
Material reservoir	Polycarbonate
Material protective guard	Polyamide
Material filter insert	Polyethylene
Part No.	R412007014

Technical information

The pressure dew point must be at least 15 °C less than ambient and medium temperature and may not exceed 3 °C.

Note: Polycarbonate reservoirs are susceptible to solvents, supplementary information can be found at "Customer information".

Nominal flow Qn with secondary pressure p2 = 6 bar at Δp = 1 bar

A change in the flow direction (from air supply on the left to air supply on the right) occurs by rotating installation by 180° about the vertical axis. Please see the operating instructions for further details.

Also suitable for separation of fluid oil or water due to the design.

The delivered product may vary from that in the illustration.

Accessories overview

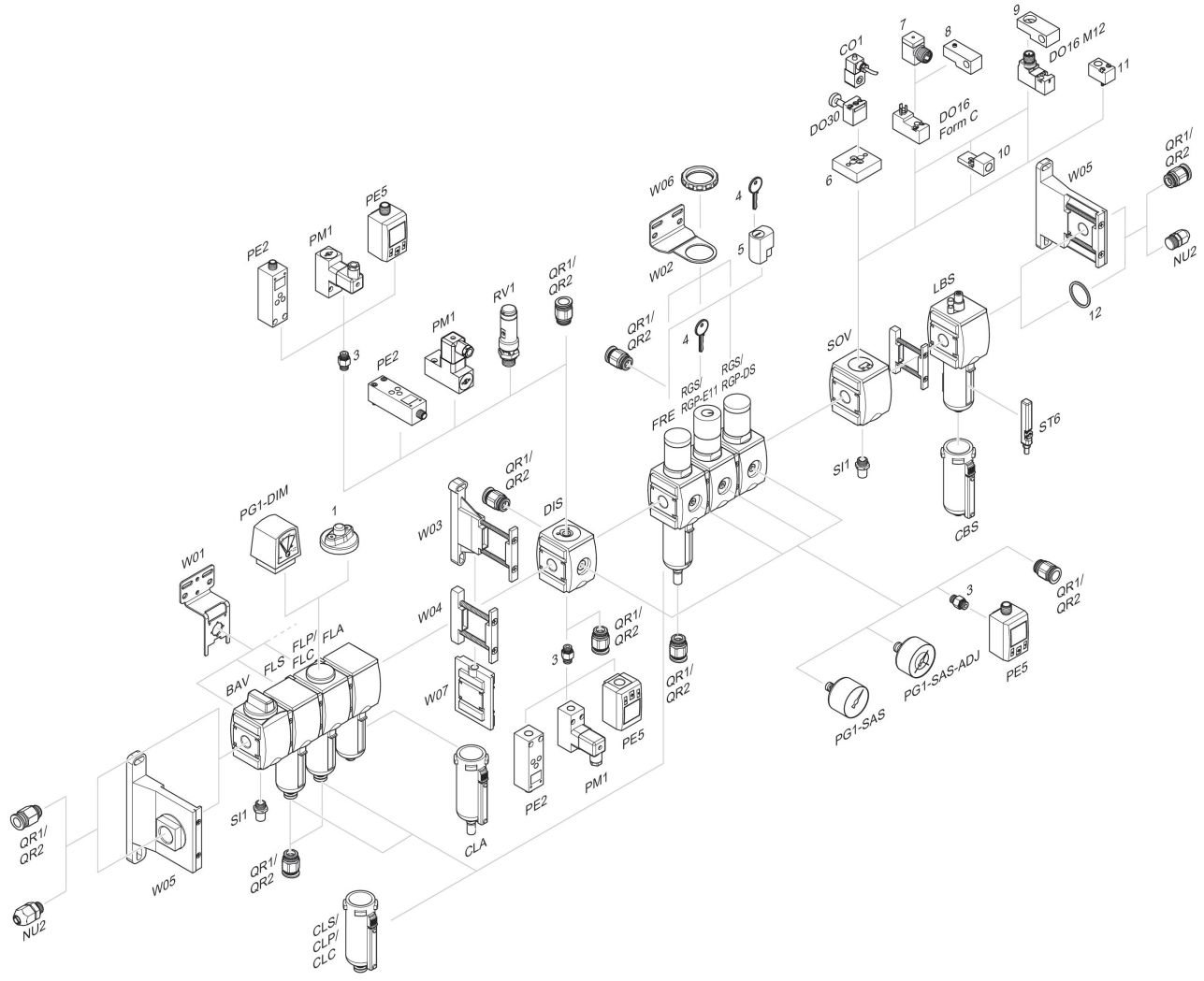

1 = contamination display 3 = Double nipple 4 = Key for E11 locking 5 = mortise lock 6 = Transition plate DO30 7 = Adapter, Series CON-VP 8 = Mounting aid DO16, form C 9 = Mounting aid DO16, M12 10 = Adapter for external pilot air 11 = Adapter pneumatic operation 12 = Sealing ring

Flow rate characteristic, p2 = 0,05 - 7 bar

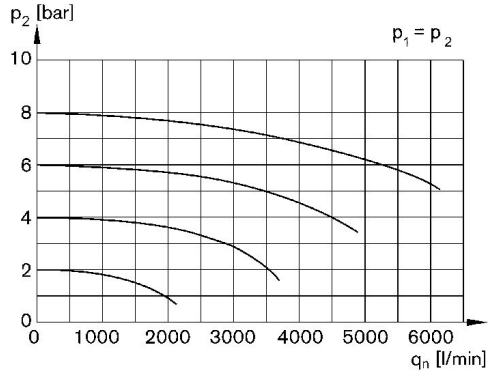

p1 = Working pressure
p2 = Secondary pressure
qn = Nominal flow

Dimensions in mm

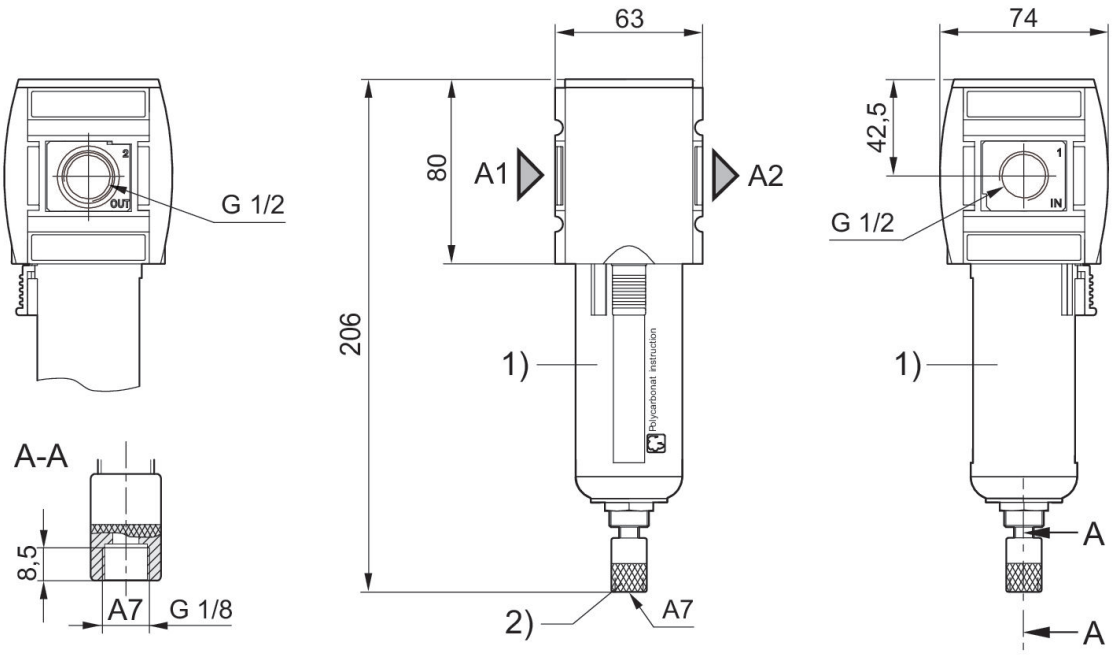

A1 = input
A2 = output
A7 = condensate drain
1) Plastic reservoir and protective guard with window
2) Fully automatic condensate drain