Pressure gauge, Series PG1-SAS

R412004409

Series PG1 Pressure gauges

With the AVENTICS Series PG1 you can visualize and rely on a clear air pressure display for each of your pneumatic circuits. In addition to the parameters for controlling the air quality, supplying sufficient pressure is the basis for operating a reliable system within machine automation. Emerson offers mechanical pressure gauges that can be integrated into machines for diverse applications and air preparation systems. The specifications of the individual versions in the universal PG1 Series provide a selection of options, such as appearance, material, or the required type of mounting.

- Clearly visible pressure indicators in different sizes and versions
- Gauges available with or without adjustable work area display
- Special gauges available like glycerine filled gauges or stainless-steel housing





Technical data

Industry	Industrial
Pressure gauge version	Bourdon tube pressure gauge Back port
Standardization	EN 837-1
Class	2,5
Compressed air connection	G 1/4
Nominal diameter	40 mm
Scale value	0.1
Min. range of application	0 bar
Max. range of application	3.2 bar
Min. display range	0 bar
Max. display range	4 bar
Min. working pressure	0 bar
Max. working pressure	4 bar
Min. ambient temperature	-20 °C
Max. ambient temperature	60 °C
Medium	Compressed air
Background color	Black
Main scale unit (outside)	bar
Main scale color (outside)	White

Secondary scale unit (inside)	psi
Secondary scale color (inside)	Grey
Pointer color	White
Weight	0.08 kg

Material

Housing material	Acrylonitrile butadiene styrene
Material viewing window	Polystyrene
Material thread	Brass
Seal material	Polytetrafluorethylene
	R412004409

Dimensions in mm

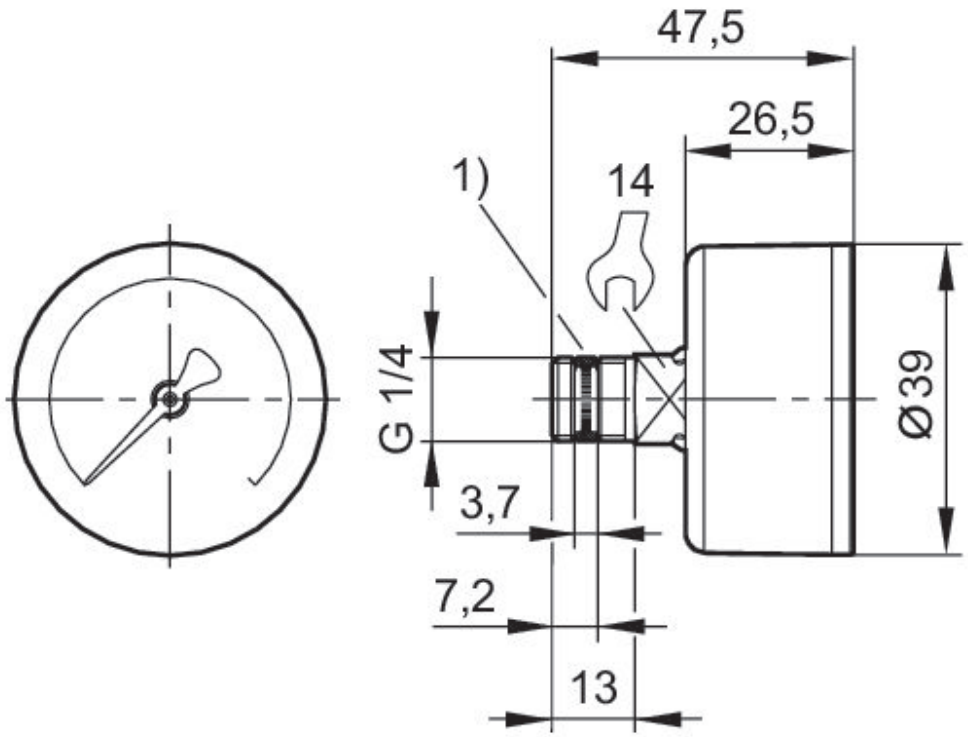

1) Gasket thread