Sensor mounting, Series CB1

R412003576

General series information
AVENTICS Sensor mountings

- AVENTICS Sensors mountings are especially designed to mount AVENTICS sensors on various cylinders.



Technical data

Industry	Industrial
For series	Archive product: Do not use in new constructions!
For series	RPC CPC ICM
Cylinders Ø min.	32 mm
Weight	0.022 kg

Material

Housing material	Aluminum
Part No.	R412003576

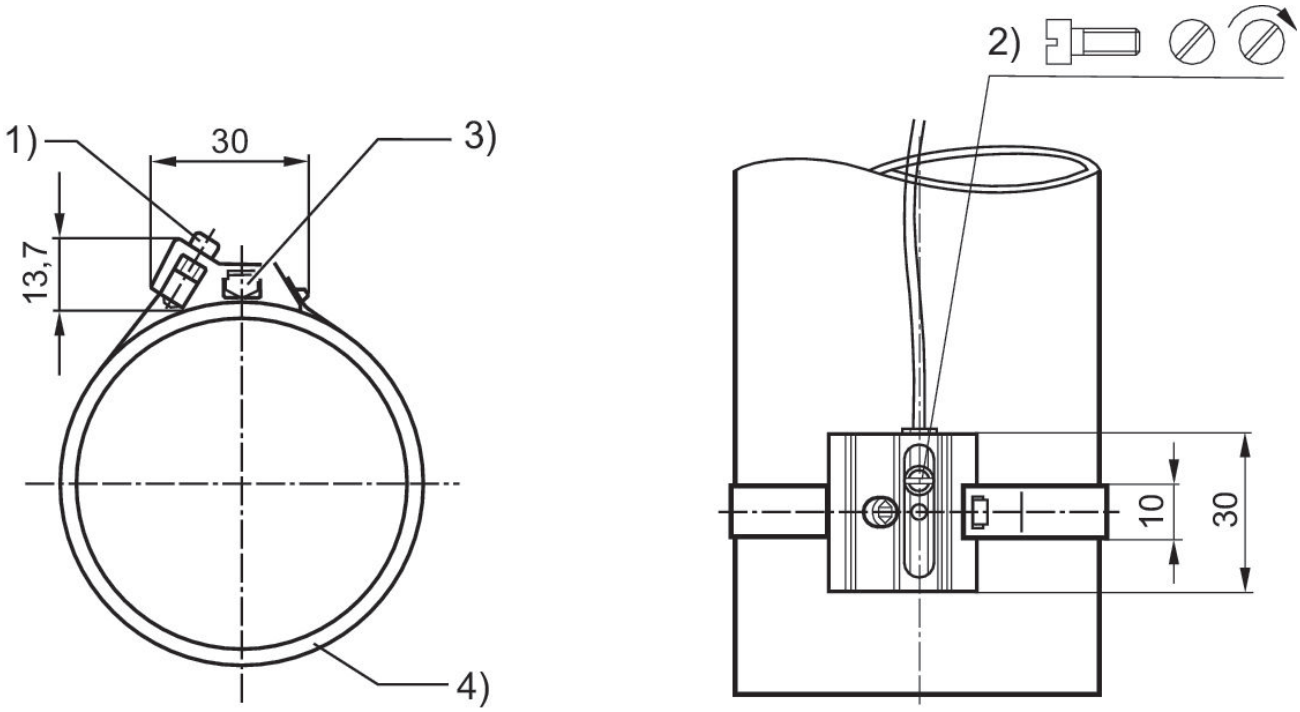

1) Mounting screw 2) Mounting screw for sensor 3) Sensor (ST6) 4) cylinder pipe

Material-nummer	1)	MA1 [Nm]
R412003576	M3x12	1 +0,1
R412003577	M3x12	1 +0,1
R412003578	M3x12	1 +0,1
R412003579	M3x12	1 +0,1
R412003580	M3x12	1 +0,1
R412024050		