Rotary Compact Module, Series RCM-SH

R412000399

AVENTICS Series RCM Rotary Compact Modules

The AVENTICS Series RCM with its rotary modules can perform all standardized rotary and swivel movements. These modules can be installed directly on mini slides and are equipped with mechanical grippers.



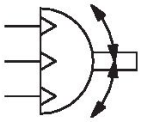

Technical data

Industry	Industrial
Type	RCM 12
Diameter	12 mm
Compressed air connection	M5
Magnetic piston	with magnetic piston
Rotary compact module version	Double piston with rack
Easy2Combine	capable
with integrated intermediate position	with integrated intermediate position
Frame size	RCM-12
Theoretical torque at	6 bar
Min. swivel times	0.3 s
Air consumption per rotation	13.29 cm³
Max. permissible axial bearing load	330 N
Radial shaft load	360 N
Max. permissible mass moment of inertia	10 kg cm²
Theoretical torque	0.95 Nm
Repetitive precision	0.05 °
Cushioning	hydraulic
Cushioning	non-adjustable
Min. angle of rotation	0 °
Max. angle of rotation	180 °
Min. working pressure	4 bar
Max. working pressure	8 bar
Min. ambient temperature	5 °C
Max. ambient temperature	60 °C
Min. medium temperature	5 °C

Max. medium temperature	60 °C
Medium	Compressed air
Min. oil content of compressed air	0 mg/m³
Max. oil content of compressed air	1 mg/m³
Max. particle size	5 µm
Weight	0.5 kg

Material

Housing material	Aluminum
Surface housing	anodized
Material front cover	Aluminum
Surface cover	black anodized
Material base	Aluminum
Surface base	black anodized
Seal material	Acrylonitrile butadiene rubber
Material axis	Steel, chrome-plated
Surface axis	hardened
Material rotary flange	Steel, chrome-plated
Surface rotary flange	hardened
Part No.	R412000399

Technical information

NOTICE: For positioning without overswing in the intermediate position, it is recommended to limit the mass moment of inertia to 40% of the maximum permissible value!

The pressure dew point must be at least 15 °C less than ambient and medium temperature and may not exceed 3 °C.

The oil content of compressed air must remain constant during the life cycle.

Use only the approved oils from AVENTICS. Further information can be found in the “Technical information” document (available in https://www.emerson.com/en-us/support).

RCM-12/.../-25

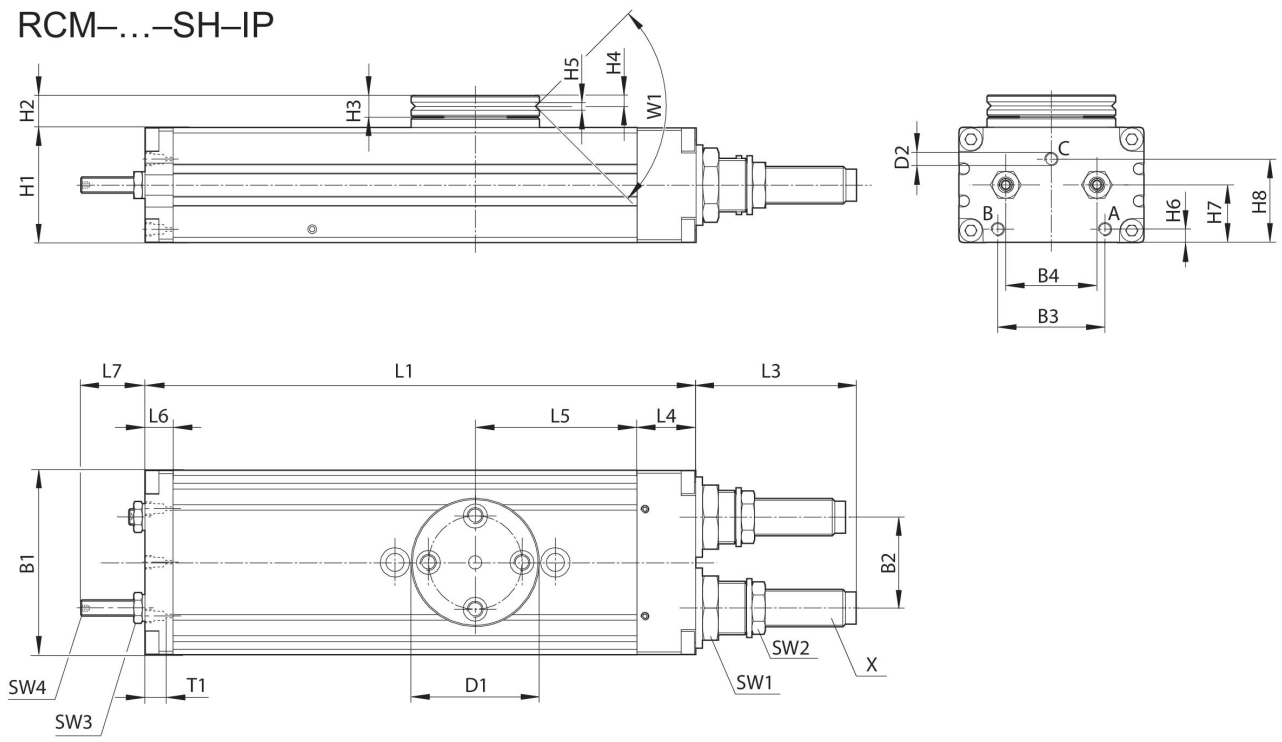

T1 = depth of thread

Part No.	B1	B2	B3	B4	Ø D1	Ø D2	H1	H2	H3	H4
R412000399	43	18	24	18	35	M5	24	10.5	6	2.9

Part No.	H5	H6	H7	H8	L1	L3	L4	L5	L6	L7
R412000399	2.5	3.7	12.5	18.1	136	33.5	14	40	8.5	17

Part No.	SW1	SW2	SW3	SW4	T1	W1	X
R412000399	15	11	7	2	4	90°	M8x1

Setting range for end positions 0°/180° and intermediate position 90°

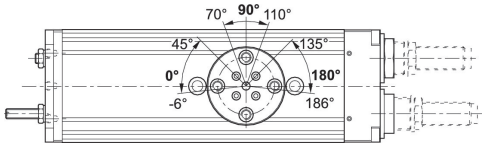

Movement into end position 180°

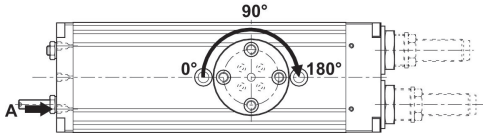

Movement into end position 0°

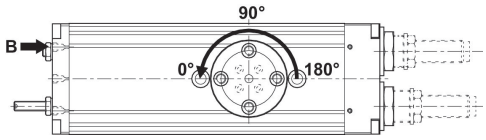

Movement into intermediate position 90°

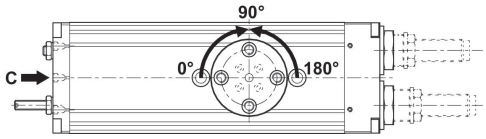

Maximum permissible radial force Fy [N] as a function of v [mm]

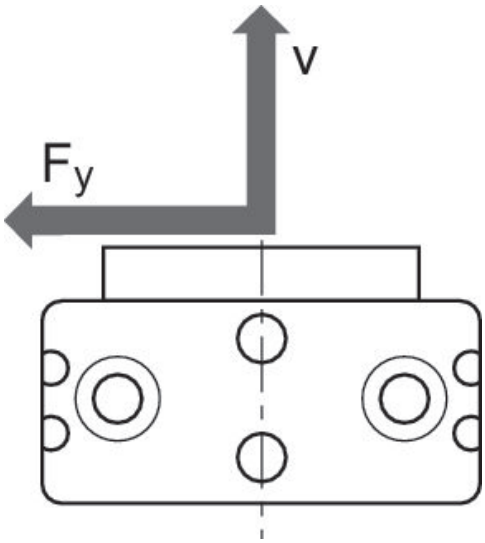

Maximum permissible radial force Fy [N] as a function of v [mm]

RCM 12

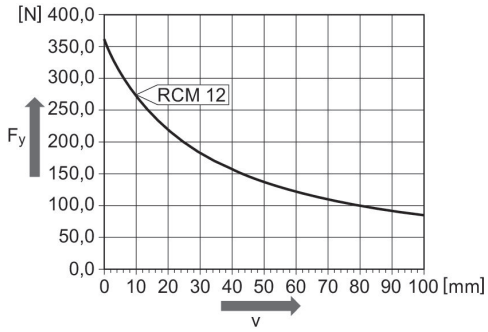

Maximum permissible radial force Fy [N] as a function of v [mm]

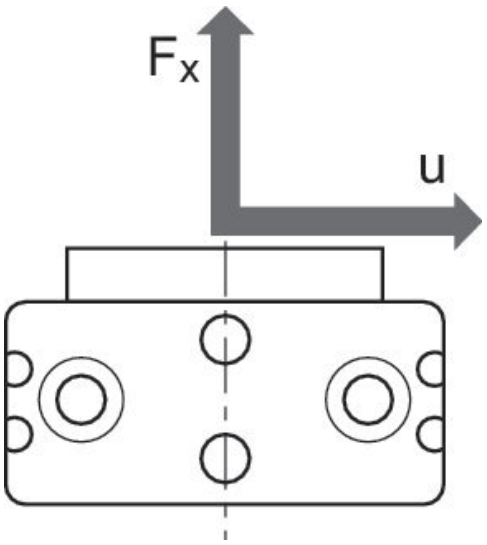

Maximum permissible axial force Fx [N] as a function of u [mm]

RCM 12

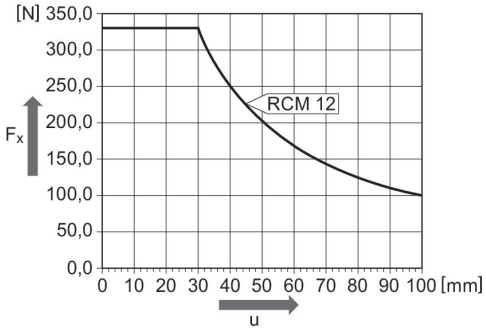

Mounting and assembly

RCM-12

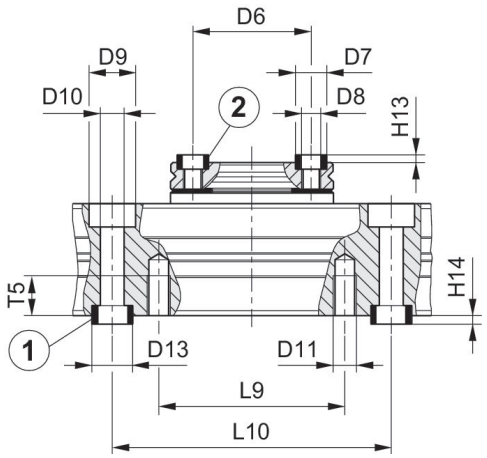

1) centering sleeve, included in the scope of delivery 2) centering sleeve

Part No.	Ø D6 ±0,02	Ø D7 k6	Ø D8	Ø D9	Ø D10	Ø D11	Ø D13 k6	H13 +0,2	H14 +0,2	L9
R412000399	25	7	M4	10	5.1	M5	9	1.6	2.1	40

Part No.	L10 ± 0,02	T5
R412000399	60	8.5