Rotary Compact Module, Series RCM-SE

R412000397

AVENTICS Series RCM Rotary Compact Modules

The AVENTICS Series RCM with its rotary modules can perform all standardized rotary and swivel movements. These modules can be installed directly on mini slides and are equipped with mechanical grippers.



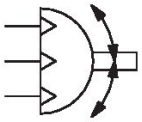

Technical data

Industry	Industrial
Type	RCM 16 – 25
Diameter	20 mm
Compressed air connection	M5
Magnetic piston	with magnetic piston
Rotary compact module version	Double piston with rack
Easy2Combine	capable
with integrated intermediate position	with integrated intermediate position
Frame size	RCM-20
Theoretical torque at	6 bar
Min. swivel times	0.3 s
Air consumption per rotation	37.83 cm³
Max. permissible axial bearing load	620 N
Radial shaft load	780 N
Max. permissible mass moment of inertia	3.2 kg cm²
Theoretical torque	3 Nm
Repetitive precision	0.2 °
Cushioning	elastic cushioning
Min. angle of rotation	0 °
Max. angle of rotation	180 °
Min. working pressure	4 bar
Max. working pressure	8 bar
Min. ambient temperature	5 °C
Max. ambient temperature	60 °C
Min. medium temperature	5 °C
Max. medium temperature	60 °C

Medium	Compressed air
Min. oil content of compressed air	0 mg/m³
Max. oil content of compressed air	1 mg/m³
Max. particle size	5 µm
Weight	1.12 kg

Material

Housing material	Aluminum
Surface housing	anodized
Material front cover	Aluminum
Surface cover	black anodized
Material base	Aluminum
Surface base	black anodized
Seal material	Acrylonitrile butadiene rubber
Material axis	Steel, chrome-plated
Surface axis	hardened
Material rotary flange	Steel, chrome-plated
Surface rotary flange	hardened
Part No.	R412000397

Technical information

NOTICE: For positioning without overswing in the intermediate position, it is recommended to limit the mass moment of inertia to 40% of the maximum permissible value!

The pressure dew point must be at least 15 °C less than ambient and medium temperature and may not exceed 3 °C.

The oil content of compressed air must remain constant during the life cycle.

Use only the approved oils from AVENTICS. Further information can be found in the “Technical information” document (available in https://www.emerson.com/en-us/support).

RCM-12/.../-25

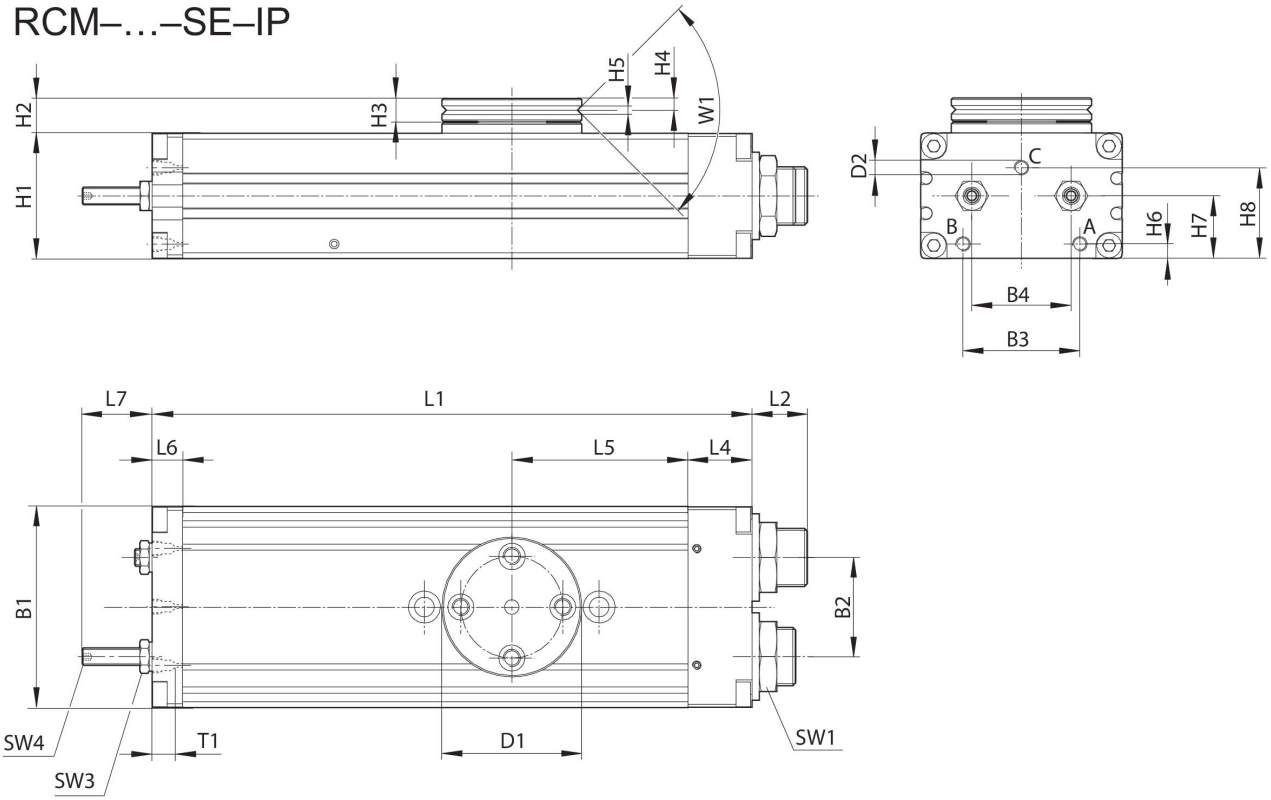

T1 = depth of thread

Part No.	B1	B2	B3	B4	Ø D1	Ø D2	H1	H2	H3	H4
R412000396	52	24	29	24	40	M5	32	10	7	3.3
R412000397	58	30	30	30	42	M5	37	11	7	3.3
R412000398	69	34	40	34	48	M5	43	12	8	4

Part No.	H5	H6	H7	H8	L1	L2	L4	L5	L6	L7
R412000396	2.5	5	16	21.1	140	15.5	18	40	8.5	17
R412000397	3	5.5	19	27.1	156	15	19	43	8.5	22
R412000398	3	5	21.5	31.1	206	19	22	60.5	10.5	24

Part No.	SW1	SW3	SW4	T1	W1
R412000396	19	7	2	4	90°
R412000397	19	8	2.5	4	90°
R412000398	23	10	3	4	90°

Mounting and assembly

RCM-16/.../-25

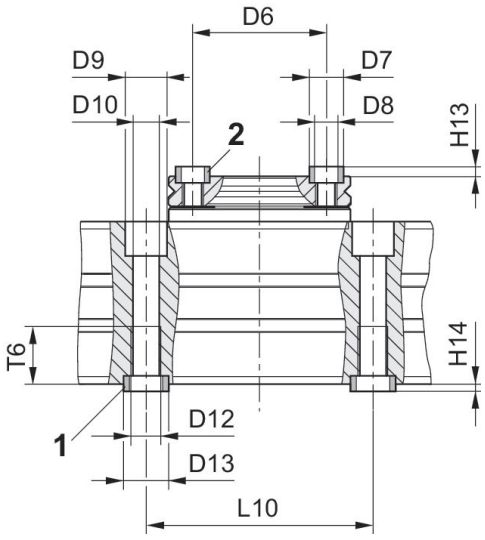

1) centering sleeve, included in the scope of delivery 2) centering sleeve

Part No.	Ø D6 ±0,02	Ø D7 k6	Ø D8	Ø D9	Ø D10	Ø D12	Ø D13 k6	H13 +0,2	H14 +0,2	L10 ± 0,02
R412000396	30	7	M5	10	5	M6	9	1.6	2.1	60
R412000397	30	7	M5	11	6.8	M8	12	1.6	2.1	60
R412000398	35	9	M6	11	6.8	M8	12	2.1	2.1	60

Part No.	T6
R412000396	11.1
R412000397	15.1
R412000398	15.1