Rotary Compact Module, Series RCM-SH

R412000392

AVENTICS Series RCM Rotary Compact Modules

The AVENTICS Series RCM with its rotary modules can perform all standardized rotary and swivel movements. These modules can be installed directly on mini slides and are equipped with mechanical grippers.



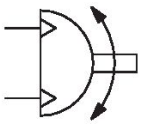

Technical data

Industry	Industrial
Type	RCM 16 – 25
Diameter	20 mm
Compressed air connection	M5
Magnetic piston	with magnetic piston
Rotary compact module version	Double piston with rack
Easy2Combine	capable
Frame size	RCM-20
air duct	with air duct
Number of air ducts	4
Theoretical torque at	6 bar
Min. swivel times	0.48 s
Air consumption per rotation	35.84 cm³
Max. permissible axial bearing load	620 N
Radial shaft load	560 N
Max. permissible mass moment of inertia	180 kg cm²
Theoretical torque	3 Nm
Repetitive precision	0.05 °
Cushioning	hydraulic
Cushioning	non-adjustable
Min. angle of rotation	0 °
Max. angle of rotation	180 °
Min. working pressure	2 bar
Max. working pressure	8 bar
Min. ambient temperature	5 °C
Max. ambient temperature	60 °C

Min. medium temperature	5 °C
Max. medium temperature	60 °C
Medium	Compressed air
Min. oil content of compressed air	0 mg/m³
Max. oil content of compressed air	1 mg/m³
Max. particle size	5 µm
Weight	1.04 kg

Material

Housing material	Aluminum
Surface housing	anodized
Material front cover	Aluminum
Surface cover	black anodized
Material base	Aluminum
Surface base	black anodized
Seal material	Acrylonitrile butadiene rubber
Material axis	Steel, chrome-plated
Surface axis	hardened
Material rotary flange	Steel, chrome-plated
Surface rotary flange	hardened
Part No.	R412000392

Technical information

The pressure dew point must be at least 15 °C less than ambient and medium temperature and may not exceed 3 °C.

The oil content of compressed air must remain constant during the life cycle.

Use only the approved oils from AVENTICS. Further information can be found in the “Technical information” document (available in https://www.emerson.com/en-us/support).

Rotary Compact Module, Series RCM-SH

R412000392

RCM-16/.../-25

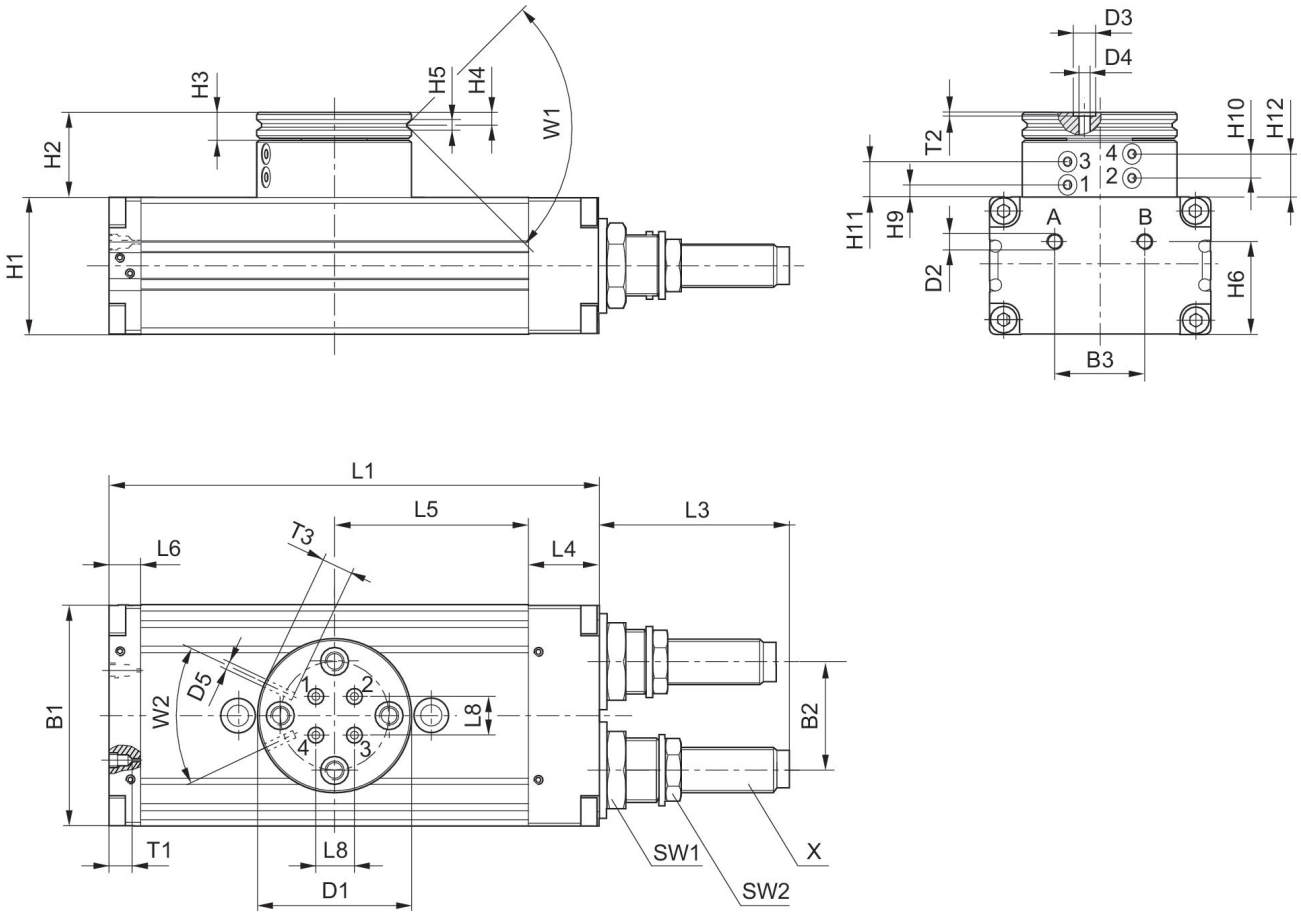

T1 = depth of thread

Part No.	B1	B2	B3	Ø D1	Ø D2	Ø D3	Ø D4	Ø D5	H1	H2
R412000389	52	24	20	40	M5	5	2.5	M3	32	25.5
R412000390	52	24	20	40	M5	5	2.5	M3	32	25.5
R412000391	58	30	20	42	M5	5	2.5	M3	37	26
R412000392	58	30	20	42	M5	5	2.5	M3	37	26
R412000393	69	34	28	48	M5	5	2.5	M3	43	26.5
R412000394	69	34	28	48	M5	5	2.5	M3	43	26.5

Part No.	H3	H4	H5	H6	H9 ±0,2	H10 ±0,2	H11 ±0,2	H12 ±0,2	L1	L3
R412000389	7	3.3	2.5	21	3.9	6.5	11.1	13.7	108	34
R412000390	7	3.3	2.5	21	3.9	6.5	11.1	13.7	108	34
R412000391	7	3.3	3	26	4.4	7	11.6	14.2	114	48.5
R412000392	7	3.3	3	26	4.4	7	11.6	14.2	114	48.5
R412000393	8	4	3	29	3.9	6.5	11.1	13.7	153	60
R412000394	8	4	3	29	3.9	6.5	11.1	13.7	153	60

Part No.	L4	L5	L6	L8	SW1	SW2	T1	T2	T3	W1
R412000389	18	40	10	6	19	13	4	0.7	4	90°
R412000390	18	40	10	6	19	13	4	0.7	4	90°
R412000391	19	43	9	10	19	15	4	0.7	4	90°
R412000392	19	43	9	10	19	15	4	0.7	4	90°
R412000393	22	60.5	10	12	23	17	4	0.7	4	90°
R412000394	22	60.5	10	12	23	17	4	0.7	4	90°

Part No.	W2	X
R412000389	50°	M10x1
R412000390	50°	M10x1
R412000391	50°	M12x1
R412000392	50°	M12x1
R412000393	50°	M14x1,5
R412000394	50°	M14x1,5

Mounting and assembly

RCM-16/.../-25

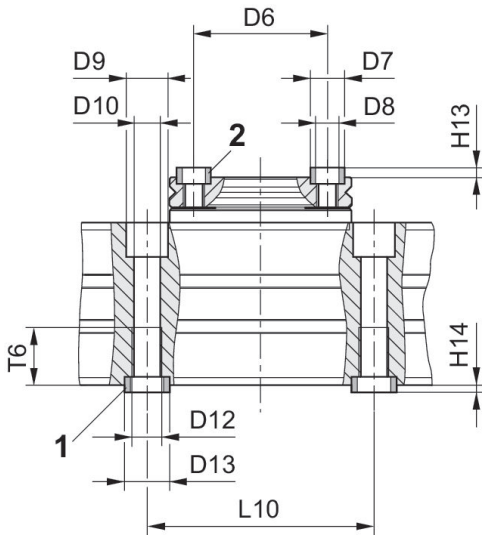

1) centering sleeve, included in the scope of delivery 2) centering sleeve

Rotary Compact Module, Series RCM-SH

R412000392

Part No.	Ø D6 ±0,02	Ø D7 k6	Ø D8	Ø D9	Ø D10	Ø D12	Ø D13 k6	H13 +0,2	H14 +0,2	L10 ±0,02
R412000389	30	7	M5	10	5	M6	9	1.6	2.1	60
R412000390	30	7	M5	10	5	M6	9	1.6	2.1	60
R412000391	30	7	M5	11	6.8	M8	12	1.6	2.1	60
R412000392	30	7	M5	11	6.8	M8	12	1.6	2.1	60
R412000393	35	9	M6	11	6.8	M8	12	2.1	2.1	60
R412000394	35	9	M6	11	6.8	M8	12	2.1	2.1	60

Part No.	T6
R412000389	11.1
R412000390	11.1
R412000391	15.1
R412000392	15.1
R412000393	15.1
R412000394	15.1