Rotary Compact Module, Series RCM-SH

R412000388

AVENTICS Series RCM Rotary Compact Modules

The AVENTICS Series RCM with its rotary modules can perform all standardized rotary and swivel movements. These modules can be installed directly on mini slides and are equipped with mechanical grippers.



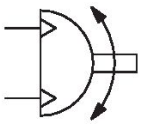

Technical data

Industry	Industrial
Type	RCM 12
Diameter	12 mm
Compressed air connection	M5
Magnetic piston	with magnetic piston
Rotary compact module version	Double piston with rack
Easy2Combine	capable
Frame size	RCM-12
air duct	with air duct
Number of air ducts	2
Theoretical torque at	6 bar
Min. swivel times	0.3 s
Air consumption per rotation	11.72 cm³
Max. permissible axial bearing load	330 N
Radial shaft load	290 N
Max. permissible mass moment of inertia	10 kg cm²
Theoretical torque	0.95 Nm
Repetitive precision	0.05 °
Cushioning	hydraulic
Cushioning	non-adjustable
Min. angle of rotation	0 °
Max. angle of rotation	180 °
Min. working pressure	2.5 bar
Max. working pressure	8 bar
Min. ambient temperature	5 °C
Max. ambient temperature	60 °C

Min. medium temperature	5 °C
Max. medium temperature	60 °C
Medium	Compressed air
Min. oil content of compressed air	0 mg/m³
Max. oil content of compressed air	1 mg/m³
Max. particle size	5 µm
Weight	0.5 kg

Material

Housing material	Aluminum
Surface housing	anodized
Material front cover	Aluminum
Surface cover	black anodized
Material base	Aluminum
Surface base	black anodized
Seal material	Acrylonitrile butadiene rubber
Material axis	Steel, chrome-plated
Surface axis	hardened
Material rotary flange	Steel, chrome-plated
Surface rotary flange	hardened
Part No.	R412000388

Technical information

The pressure dew point must be at least 15 °C less than ambient and medium temperature and may not exceed 3 °C.

The oil content of compressed air must remain constant during the life cycle.

Use only the approved oils from AVENTICS. Further information can be found in the “Technical information” document (available in https://www.emerson.com/en-us/support).

Rotary Compact Module, Series RCM-SH

R412000388

RCM-12

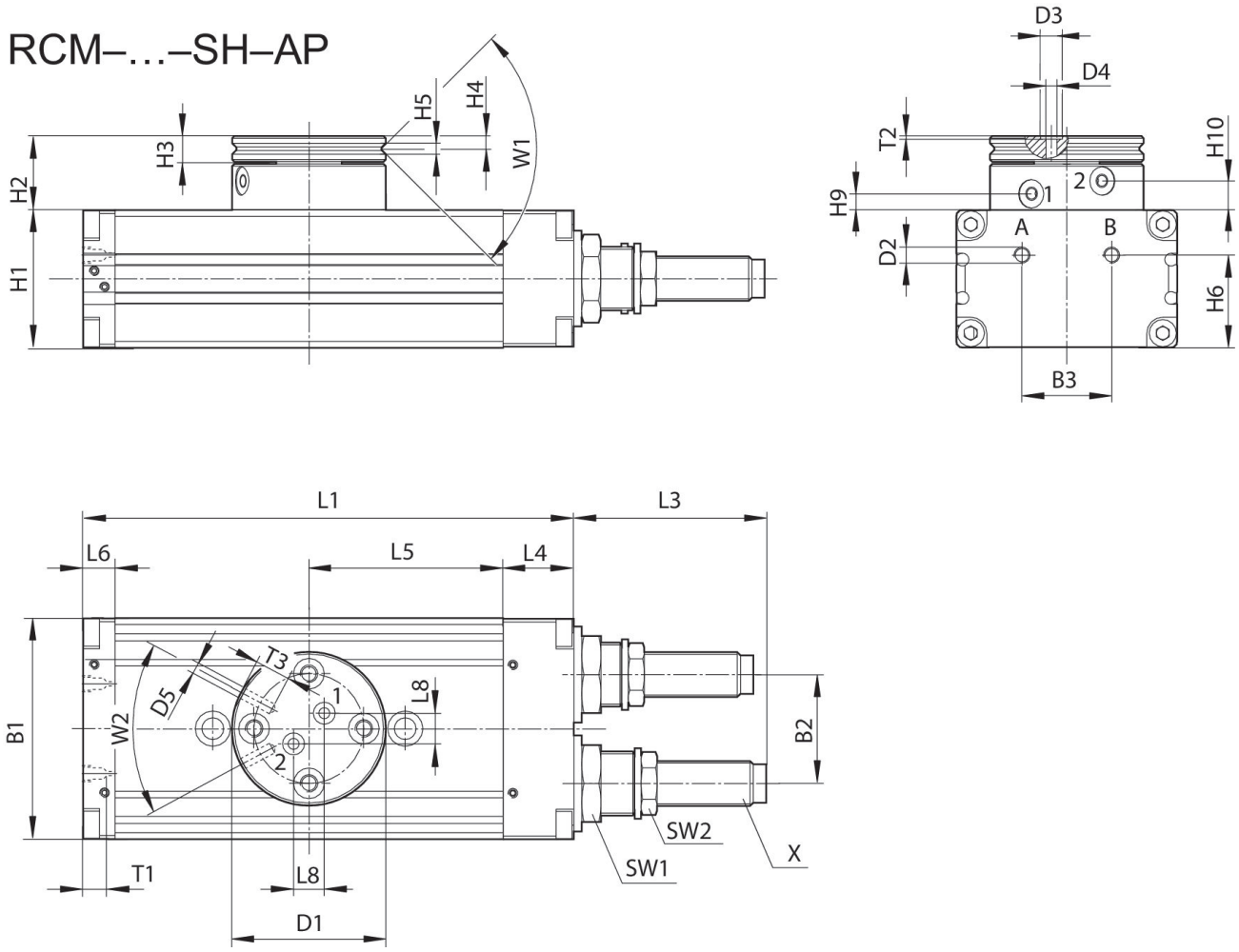

T1 = depth of thread

Part No.	B1	B2	B3	Ø D1	Ø D2	Ø D3	Ø D4	Ø D5	H1	H2
R412000387	43	18	18	35	M5	5	2.5	M3	24	17
R412000388	43	18	18	35	M5	5	2.5	M3	24	17

Part No.	H3	H4	H5	H6	H9 ±0,2	H10 ±0,2	L1	L3	L4	L5
R412000387	6	2.9	2.5	18	3.8	6.7	103	33.5	14	40
R412000388	6	2.9	2.5	18	3.8	6.7	103	33.5	14	40

Part No.	L6	L8	SW1	SW2	T1	T2	T3	W1	W2	X
R412000387	9	7	15	11	4	0.7	4	90°	56°	M8x1
R412000388	9	7	15	11	4	0.7	4	90°	56°	M8x1

Setting range for end positions 0° / 90° / 180°

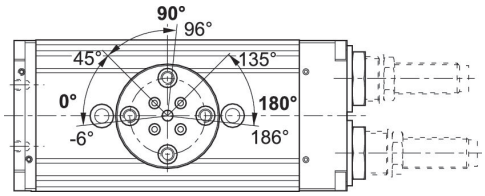

Movement into end position 90°/180°

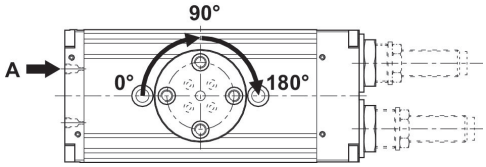

Movement into end position 0°

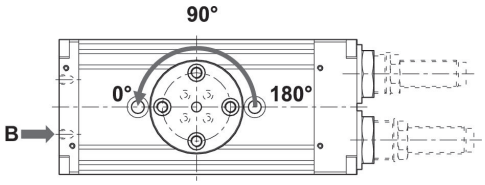

Maximum permissible radial force Fy [N] as a function of v [mm]

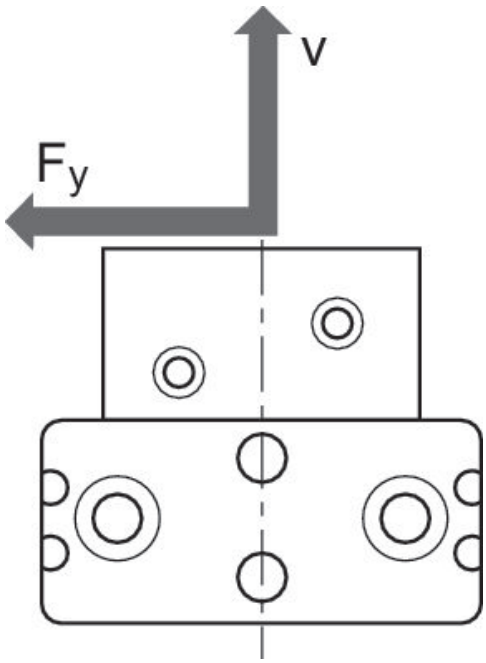

Maximum permissible radial force Fy [N] as a function of v [mm]
RCM-12

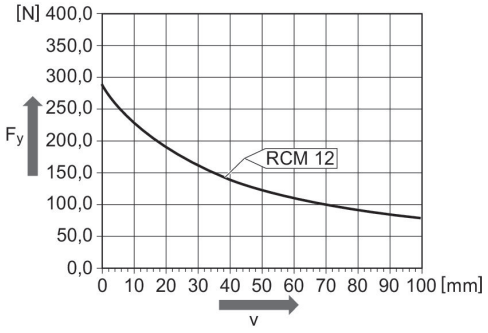

Maximum permissible axial force Fx [N] as a function of u [mm]

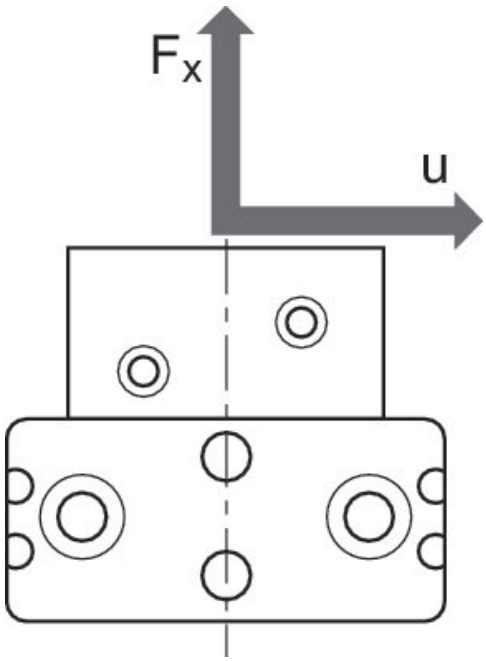

Maximum permissible axial force Fx [N] as a function of u [mm]
RCM 12

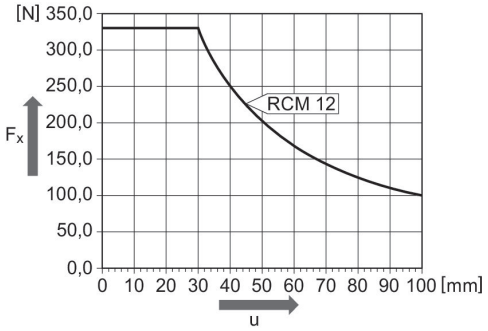

Mounting and assembly
RCM-12

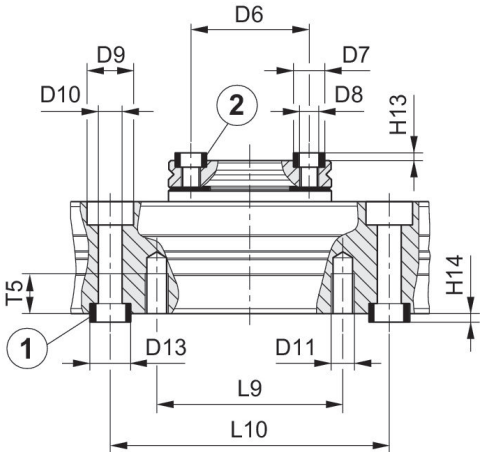

1) centering sleeve, included in the scope of delivery 2) centering sleeve

Mounting and assembly
RCM 12

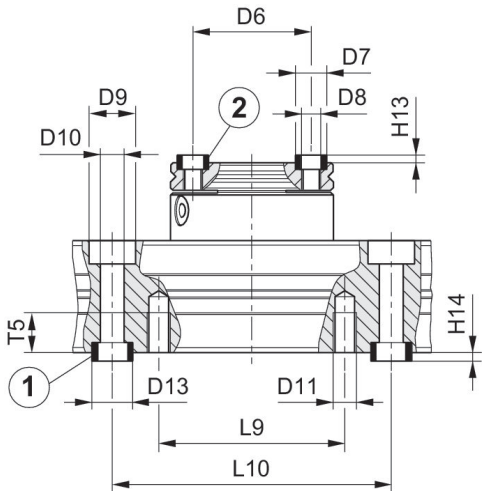

1) centering sleeve, included in the scope of delivery 2) centering sleeve

Part No.	Ø D6 ±0,02	Ø D7 k6	Ø D8	Ø D9	Ø D10	Ø D11	Ø D13 k6	H13 +0,2	H14 +0,2	L9
R412000387	25	7	M4	10	5.1	M5	9	1.6	2.1	40
R412000388	25	7	M4	10	5.1	M5	9	1.6	2.1	40

Part No.	L10 ±0,02	T5
R412000387	60	8.5
R412000388	60	8.5