Rotary Compact Module, Series RCM-SE

R412000383

AVENTICS Series RCM Rotary Compact Modules

The AVENTICS Series RCM with its rotary modules can perform all standardized rotary and swivel movements. These modules can be installed directly on mini slides and are equipped with mechanical grippers.

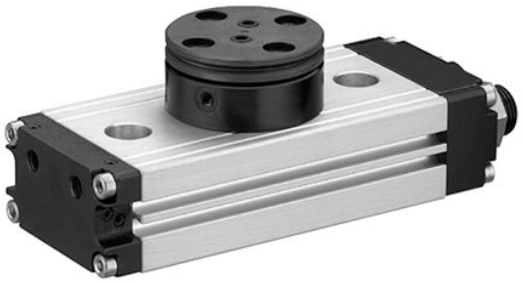

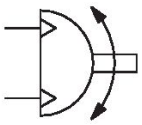

Technical data

Industry	Industrial
Type	RCM 16 – 25
Diameter	20 mm
Compressed air connection	M5
Magnetic piston	with magnetic piston
Rotary compact module version	Double piston with rack
Easy2Combine	capable
Frame size	RCM-20
air duct	with air duct
Number of air ducts	4
Theoretical torque at	6 bar
Min. swivel times	0.22 s
Air consumption per rotation	17.92 cm³
Max. permissible axial bearing load	620 N
Radial shaft load	560 N
Max. permissible mass moment of inertia	3.2 kg cm²
Theoretical torque	3 Nm
Repetitive precision	0.2 °
Cushioning	elastic cushioning
Min. angle of rotation	0 °
Max. angle of rotation	90 °
Min. working pressure	2 bar
Max. working pressure	8 bar
Min. ambient temperature	5 °C
Max. ambient temperature	60 °C
Min. medium temperature	5 °C

Max. medium temperature	60 °C
Medium	Compressed air
Min. oil content of compressed air	0 mg/m³
Max. oil content of compressed air	1 mg/m³
Max. particle size	5 µm
Weight	0.99 kg

Material

Housing material	Aluminum
Surface housing	anodized
Material front cover	Aluminum
Surface cover	black anodized
Material base	Aluminum
Surface base	black anodized
Seal material	Acrylonitrile butadiene rubber
Material axis	Steel, chrome-plated
Surface axis	hardened
Material rotary flange	Steel, chrome-plated
Surface rotary flange	hardened
Part No.	R412000383

Technical information

The pressure dew point must be at least 15 °C less than ambient and medium temperature and may not exceed 3 °C.

The oil content of compressed air must remain constant during the life cycle.

Use only the approved oils from AVENTICS. Further information can be found in the “Technical information” document (available in https://www.emerson.com/en-us/support).

Rotary Compact Module, Series RCM-SE

R412000383

RCM-16/.../-25

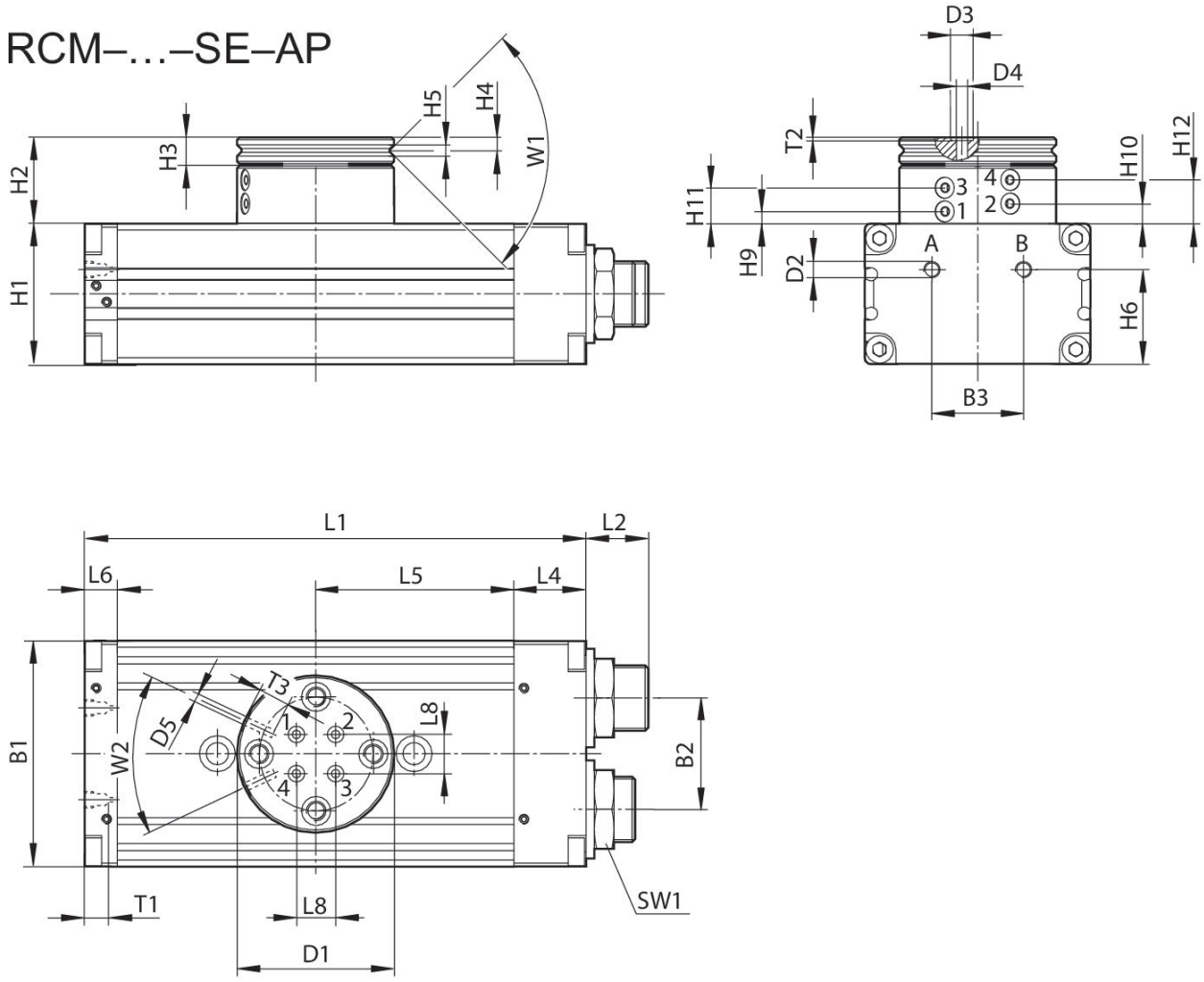

T1 = depth of thread

Part No.	B1	B2	B3	Ø D1	Ø D2	Ø D3	Ø D4	Ø D5	H1	H2
R412000381	52	24	20	40	M5	5	2.5	M3	32	25.5
R412000382	52	24	20	40	M5	5	2.5	M3	32	25.5
R412000383	58	30	20	42	M5	5	2.5	M3	37	26
R412000384	58	30	20	42	M5	5	2.5	M3	37	26
R412000385	69	34	28	48	M5	5	2.5	M3	43	26.5
R412000386	69	34	28	48	M5	5	2.5	M3	43	26.5

Part No.	H3	H4	H5	H6	H9 ±0,2	H10 ±0,2	H11 ±0,2	H12 ±0,2	L1	L2
R412000381	7	3.3	2.5	21	3.9	6.5	11.1	13.7	108	15
R412000382	7	3.3	2.5	21	3.9	6.5	11.1	13.7	108	15
R412000383	7	3.3	3	26	4.4	7	11.6	14.2	114	15
R412000384	7	3.3	3	26	4.4	7	11.6	14.2	114	15
R412000385	8	4	3	29	3.9	6.5	11.1	13.7	153	19
R412000386	8	4	3	29	3.9	6.5	11.1	13.7	153	19

Part No.	L4	L5	L6	L8	SW1	T1	T2	T3	W1	W2
R412000381	18	40	10	6	19	4	0.7	4	90°	50°
R412000382	18	40	10	6	19	4	0.7	4	90°	50°
R412000383	19	43	9	10	19	4	0.7	4	90°	50°
R412000384	19	43	9	10	19	4	0.7	4	90°	50°
R412000385	22	60.5	10	12	23	4	0.7	4	90°	50°
R412000386	22	60.5	10	12	23	4	0.7	4	90°	50°

Setting range for end positions 0° / 90° / 180°

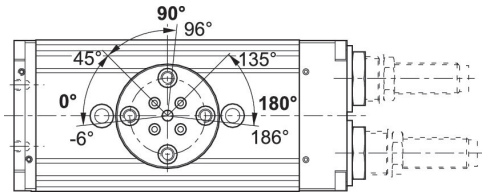

Movement into end position 90°/180°

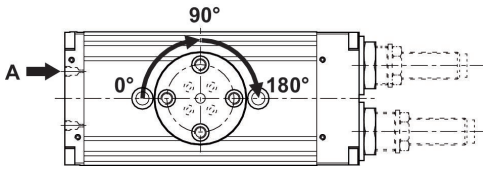

Movement into end position 0°

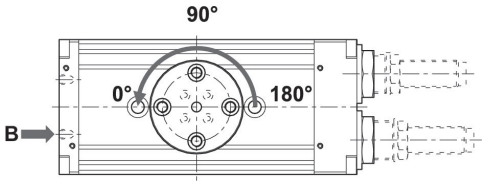

Maximum permissible radial force Fy [N] as a function of v [mm]

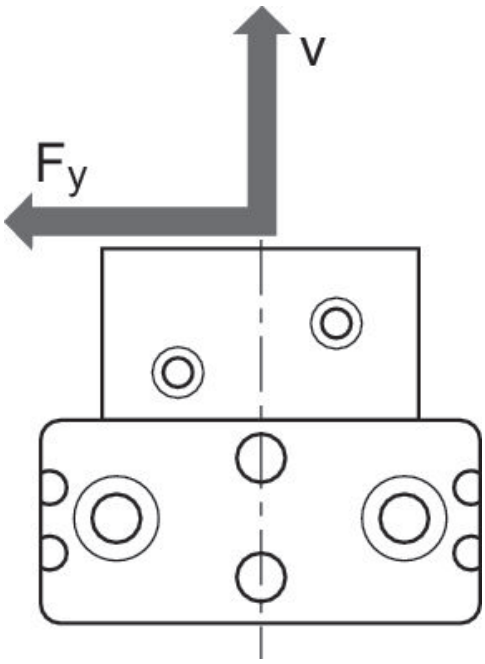

Maximum permissible radial force Fy [N] as a function of v [mm]

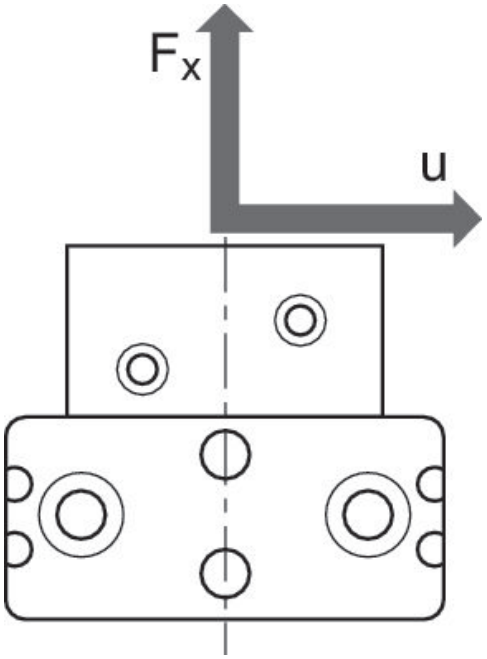

Maximum permissible axial force Fx [N] as a function of u [mm]

RCM 16 – 25

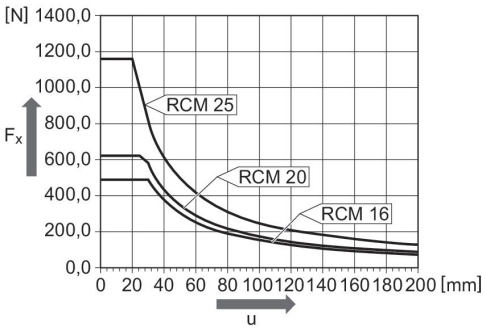

Mounting and assembly
RCM-8/-16/-20/-25

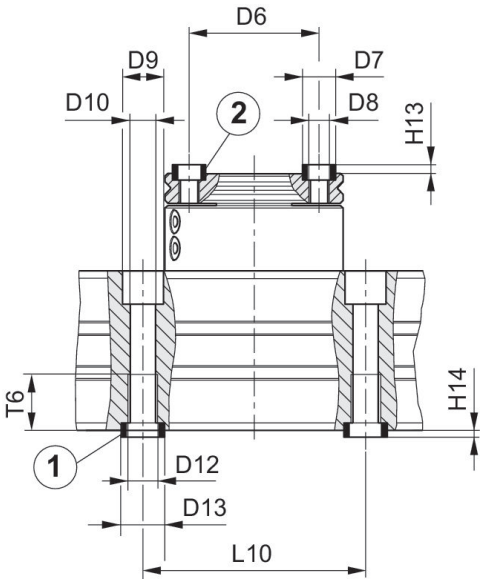

1) centering sleeve, included in the scope of delivery 2) centering sleeve

Part No.	Ø D6 ±0,02	Ø D7 k6	Ø D8	Ø D9	Ø D10	Ø D12	Ø D13 k6	H13 +0,2	H14 +0,2	L10 ± 0,02
R412000381	30	7	M5	10	5	M6	9	1.6	2.1	60
R412000382	30	7	M5	10	5	M6	9	1.6	2.1	60
R412000383	30	7	M5	11	6.8	M8	12	1.6	2.1	60
R412000384	30	7	M5	11	6.8	M8	12	1.6	2.1	60
R412000385	35	9	M6	11	6.8	M8	12	2.1	2.1	60
R412000386	35	9	M6	11	6.8	M8	12	2.1	2.1	60

Part No.	T6
R412000381	11.1
R412000382	11.1
R412000383	15.1
R412000384	15.1
R412000385	15.1
R412000386	15.1