Rotary Compact Module, Series RCM-SE

R412000378

AVENTICS Series RCM Rotary Compact Modules

The AVENTICS Series RCM with its rotary modules can perform all standardized rotary and swivel movements. These modules can be installed directly on mini slides and are equipped with mechanical grippers.

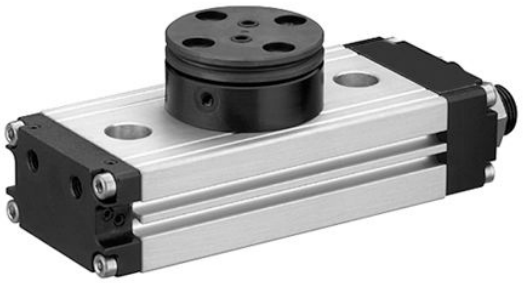

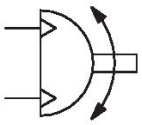

Technical data

Industry	Industrial
Type	RCM-08
Diameter	8 mm
Compressed air connection	M3
Magnetic piston	with magnetic piston
Rotary compact module version	Double piston with rack
Easy2Combine	capable
Frame size	RCM-08
air duct	with air duct
Number of air ducts	2
Theoretical torque at	6 bar
Min. swivel times	0.28 s
Air consumption per rotation	4.27 cm³
Max. permissible axial bearing load	280 N
Radial shaft load	210 N
Max. permissible mass moment of inertia	0.25 kg cm²
Theoretical torque	0.33 Nm
Repetitive precision	0.2 °
Cushioning	elastic cushioning
Min. angle of rotation	0 °
Max. angle of rotation	180 °
Min. working pressure	3.5 bar
Max. working pressure	8 bar
Min. ambient temperature	5 °C
Max. ambient temperature	60 °C
Min. medium temperature	5 °C

Max. medium temperature	60 °C
Medium	Compressed air
Min. oil content of compressed air	0 mg/m³
Max. oil content of compressed air	1 mg/m³
Max. particle size	5 µm
Weight	0.19 kg

Material

Housing material	Aluminum
Surface housing	anodized
Material front cover	Aluminum
Surface cover	black anodized
Material base	Aluminum
Surface base	black anodized
Seal material	Acrylonitrile butadiene rubber
Material axis	Steel, chrome-plated
Surface axis	hardened
Material rotary flange	Steel, chrome-plated
Surface rotary flange	hardened
Part No.	R412000378

Technical information

The pressure dew point must be at least 15 °C less than ambient and medium temperature and may not exceed 3 °C.

The oil content of compressed air must remain constant during the life cycle.

Use only the approved oils from AVENTICS. Further information can be found in the “Technical information” document (available in https://www.emerson.com/en-us/support).

RCM-8/-12

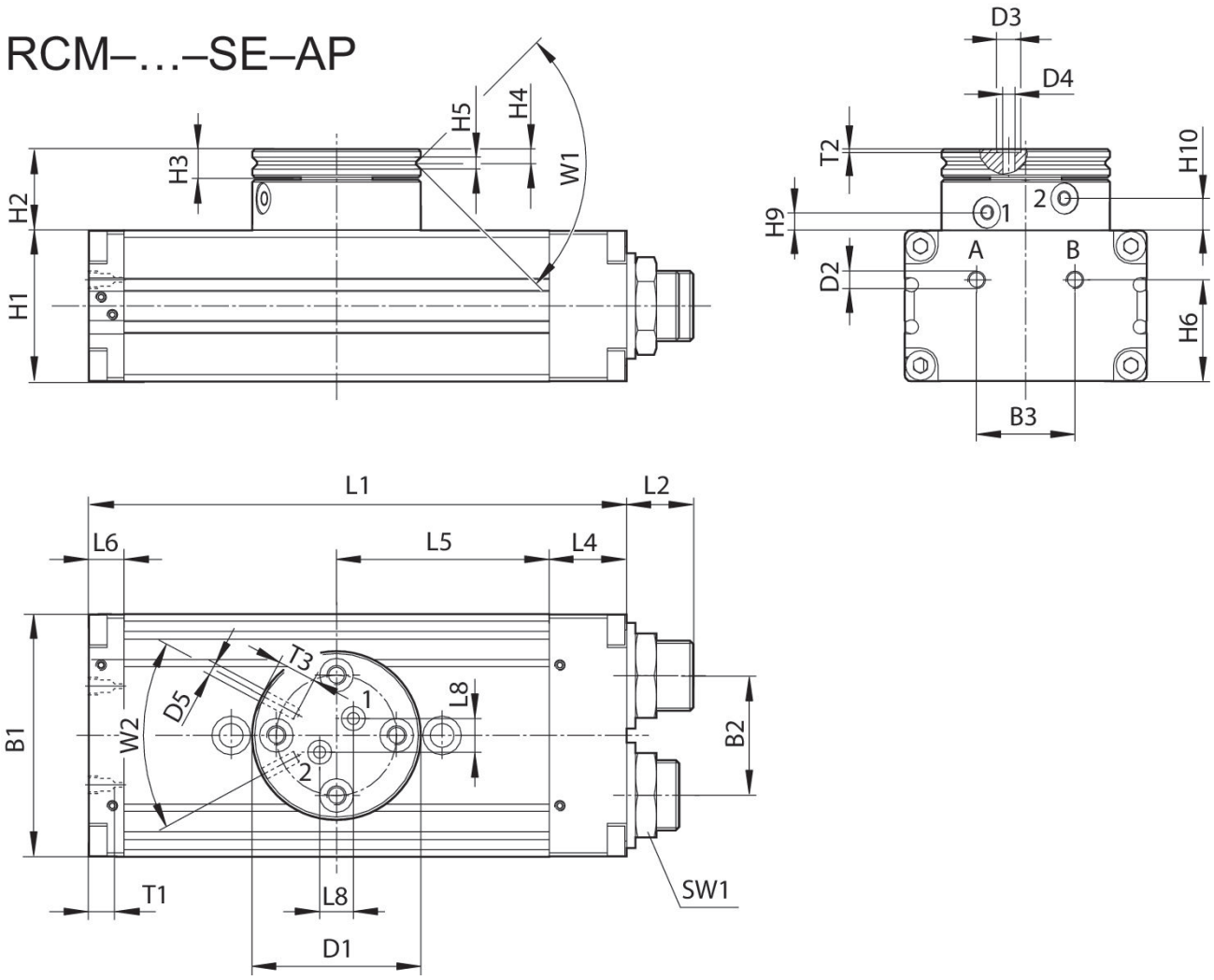

T1 = depth of thread

Part No.	B1	B2	B3	Ø D1	Ø D2	Ø D3	Ø D4	Ø D5	H1	H2
R412000377	35	15	13	28	M3	3	1.5	M3	18	16.5
R412000378	35	15	13	28	M3	3	1.5	M3	18	16.5

Part No.	H3	H4	H5	H6	H9 ±0,2	H10 ±0,2	L1	L2	L4	L5
R412000377	5	2.4	2	14	4.3	7.2	77	9.5	7	31.5
R412000378	5	2.4	2	14	4.3	7.2	77	9.5	7	31.5

Part No.	L6	L8	SW1	T1	T2	T3	W1	W2
R412000377	7	4	10	3	0.35	4	90°	60°
R412000378	7	4	10	3	0.35	4	90°	60°

Setting range for end positions 0° / 90° / 180°

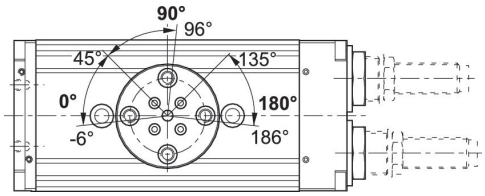

Movement into end position 90°/180°

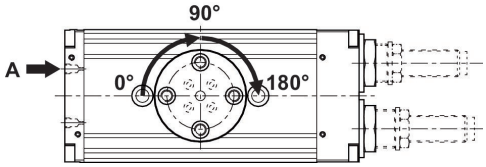

Movement into end position 0°

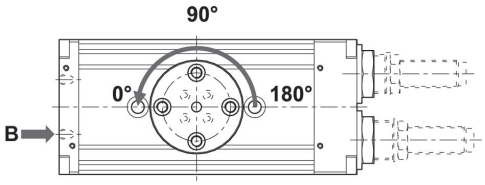

Maximum permissible radial force Fy [N] as a function of v [mm]

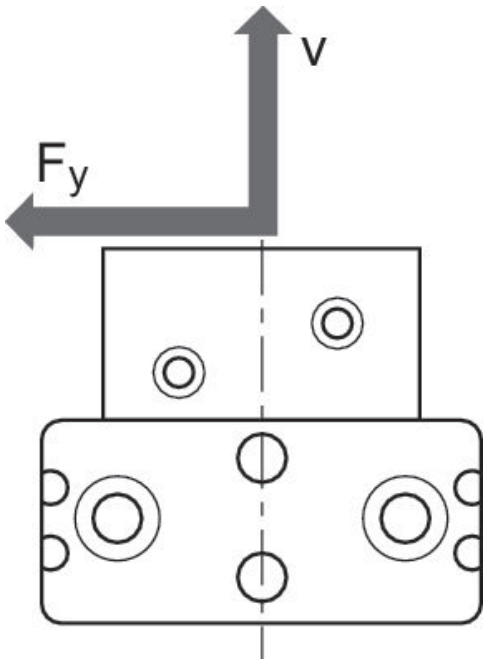

Maximum permissible radial force Fy [N] as a function of v [mm]
RCM 8 – 12

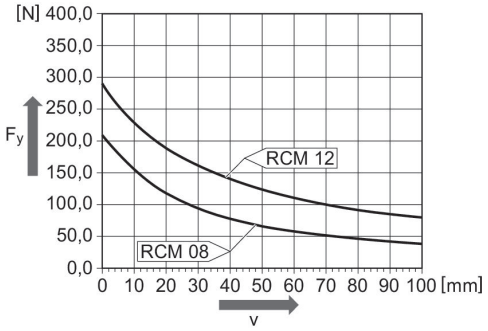

Maximum permissible radial force Fy [N] as a function of v [mm]

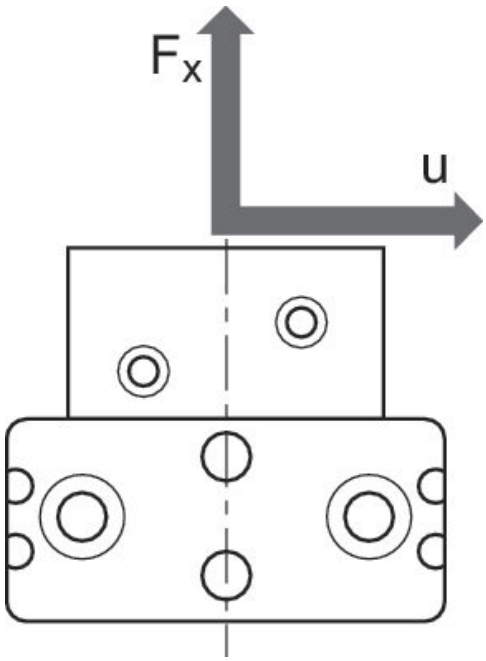

Maximum permissible radial force Fy [N] as a function of v [mm]
RCM 8 – 12

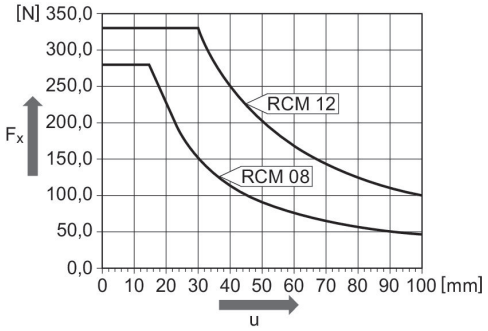

Mounting and assembly
RCM-8/-16/-20/-25

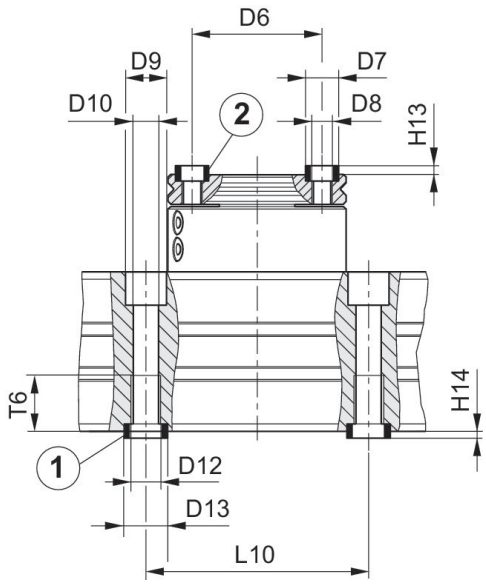

1) centering sleeve, included in the scope of delivery 2) centering sleeve

Part No.	Ø D6 ±0,02	Ø D7 k6	Ø D8	Ø D9	Ø D10	Ø D11	Ø D12	Ø D13 k6	H13 +0,2	H14 +0,2
R412000377	20	5	M3	7.5	4.2	–	M5	7	1.6	1.6
R412000378	20	5	M3	7.5	4.2	–	M5	7	1.6	1.6

Part No.	L9	L10 ± 0,02	T5	T6
R412000377	–	40	–	9.1
R412000378	–	40	–	9.1