Rotary Compact Module, Series RCM-SE

R412000368

AVENTICS Series RCM Rotary Compact Modules

The AVENTICS Series RCM with its rotary modules can perform all standardized rotary and swivel movements. These modules can be installed directly on mini slides and are equipped with mechanical grippers.



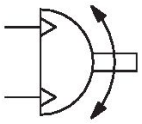

Technical data

Industry	Industrial
Type	RCM 16 – 25
Diameter	25 mm
Compressed air connection	M5
Magnetic piston	with magnetic piston
Rotary compact module version	Double piston with rack
Easy2Combine	capable
Frame size	RCM-25
Theoretical torque at	6 bar
Min. swivel times	0.25 s
Air consumption per rotation	77.5 cm³
Max. permissible axial bearing load	1160 N
Radial shaft load	1480 N
Max. permissible mass moment of inertia	6.3
Theoretical torque	6.5 Nm
Repetitive precision	0.2 °
Cushioning	elastic cushioning
Min. angle of rotation	0 °
Max. angle of rotation	180 °

Min. working pressure	2 bar
Max. working pressure	8 bar
Min. ambient temperature	5 °C
Max. ambient temperature	60 °C
Min. medium temperature	5 °C
Max. medium temperature	60 °C
Medium	Compressed air
Min. oil content of compressed air	0 mg/m³
Max. oil content of compressed air	1 mg/m³
Max. particle size	5 µm
Weight	1.73 kg

Material

Housing material	Aluminum
Surface housing	anodized
Material front cover	Aluminum
Surface cover	black anodized
Material base	Aluminum
Surface base	black anodized
Seal material	Acrylonitrile butadiene rubber
Material axis	Steel, chrome-plated
Surface axis	hardened
Material rotary flange	Steel, chrome-plated
Surface rotary flange	hardened
Part No.	R412000368

Technical information

The pressure dew point must be at least 15 °C less than ambient and medium temperature and may not exceed 3 °C.

The oil content of compressed air must remain constant during the life cycle.

Use only the approved oils from AVENTICS. Further information can be found in the “Technical information” document (available in https://www.emerson.com/en-us/support).

RCM-6/.../-25

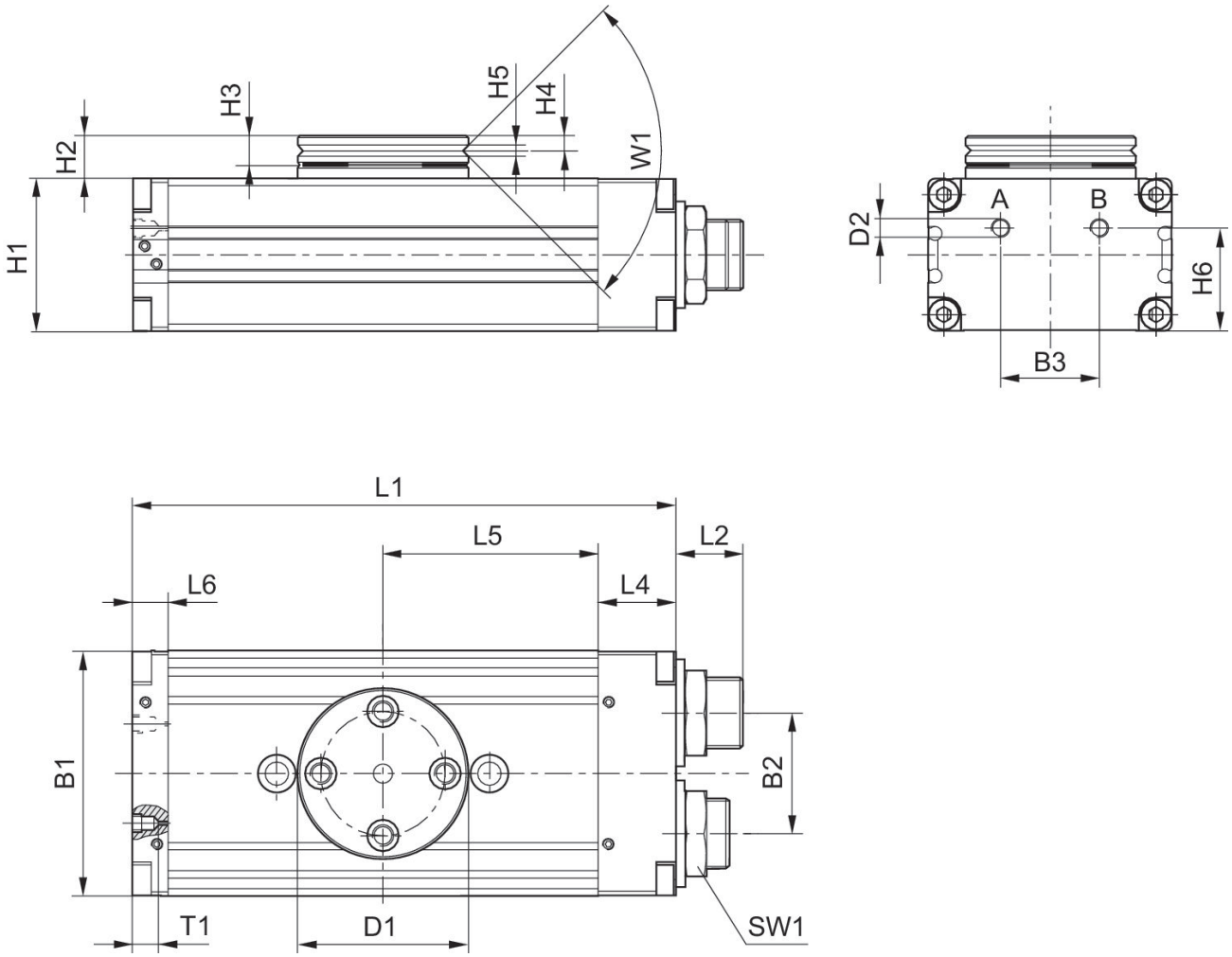

T1 = depth of thread

Frame size	Part No.	B1	B2	B3	Ø D1	Ø D2	H1	H2	H3	H4
RCM-16	R412000363	52	24	20	40	M5	32	10	7	3,3
RCM-16	R412000364	52	24	20	40	M5	32	10	7	3,3
RCM-20	R412000365	58	30	20	42	M5	37	11	7	3,3
RCM-20	R412000366	58	30	20	42	M5	37	11	7	3,3
RCM-25	R412000367	69	34	28	48	M5	43	12	8	4
RCM-25	R412000368	69	34	28	48	M5	43	12	8	4

Frame size	H5	H6	L1	L2	L4	L5	L6	SW1	T1	W1
RCM-16	2.5	21	108	15	18	40	10	19	4	90°
RCM-16	2.5	21	108	15	18	40	10	19	4	90°
RCM-20	3	26	114	15	19	43	9	19	4	90°
RCM-20	3	26	114	15	19	43	9	19	4	90°
RCM-25	3	29	153	19	22	60.5	10	23	4	90°
RCM-25	3	29	153	19	22	60.5	10	23	4	90°

Mounting and assembly

RCM-16/.../-25

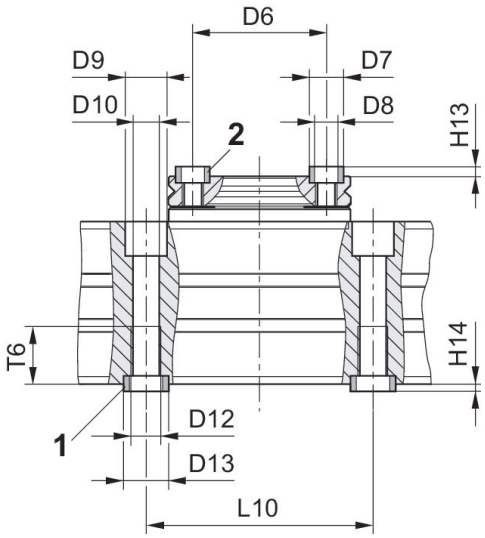

1) centering sleeve, included in the scope of delivery 2) centering sleeve

Frame size	Part No.	Ø D6 ±0,02	Ø D7 k6	Ø D8	Ø D9	Ø D10	Ø D11	Ø D12	Ø D13 k6	H13 +0,2
RCM-16	R412000363	30	7	M5	10	5	–	M6	9	1.6
RCM-16	R412000364	30	7	M5	10	5	–	M6	9	1.6
RCM-20	R412000365	30	7	M5	11	6.8	–	M8	12	1.6
RCM-20	R412000366	30	7	M5	11	6.8	–	M8	12	1.6
RCM-25	R412000367	35	9	M6	11	6.8	–	M8	12	2.1
RCM-25	R412000368	35	9	M6	11	6.8	–	M8	12	2.1

Frame size	H14 +0,2	L9	L10 ± 0,02	T5	T6
RCM-16	2.1	–	60	–	11.1
RCM-16	2.1	–	60	–	11.1
RCM-20	2.1	–	60	–	15.1
RCM-20	2.1	–	60	–	15.1
RCM-25	2.1	–	60	–	15.1
RCM-25	2.1	–	60	–	15.1