# Rotary Compact Module, Series RCM-SE

**R412000367**



## AVENTICS Series RCM Rotary Compact Modules

The AVENTICS Series RCM with its rotary modules can perform all standardized rotary and swivel movements. These modules can be installed directly on mini slides and are equipped with mechanical grippers.



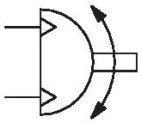

## Technical data

| | |
|---|---|
| Industry | Industrial |
| Type | RCM 16 – 25 |
| Diameter | 25 mm |
| Compressed air connection | M5 |
| Magnetic piston | with magnetic piston |
| Rotary compact module version | Double piston with rack |
| Easy2Combine | capable |
| Frame size | RCM-25 |
| Theoretical torque at | 6 bar |
| Min. swivel times | 0.16 s |
| Air consumption per rotation | 38.75 cm³ |
| Max. permissible axial bearing load | 1160 N |
| Radial shaft load | 1480 N |
| Max. permissible mass moment of inertia | 6.3 |
| Theoretical torque | 6.5 Nm |
| Repetitive precision | 0.2 ° |
| Cushioning | elastic cushioning |
| Min. angle of rotation | 0 ° |
| Max. angle of rotation | 90 ° |

| | |
|---|---|
| Min. working pressure | 2 bar |
| Max. working pressure | 8 bar |
| Min. ambient temperature | 5 °C |
| Max. ambient temperature | 60 °C |
| Min. medium temperature | 5 °C |
| Max. medium temperature | 60 °C |
| Medium | Compressed air |
| Min. oil content of compressed air | 0 mg/m³ |
| Max. oil content of compressed air | 1 mg/m³ |
| Max. particle size | 5 µm |
| Weight | 1.73 kg |

## Material

| | |
|---|---|
| Housing material | Aluminum |
| Surface housing | anodized |
| Material front cover | Aluminum |
| Surface cover | black anodized |
| Material base | Aluminum |
| Surface base | black anodized |
| Seal material | Acrylonitrile butadiene rubber |
| Material axis | Steel, chrome-plated |
| Surface axis | hardened |
| Material rotary flange | Steel, chrome-plated |
| Surface rotary flange | hardened |
| Part No. | R412000367 |

## Technical information

The pressure dew point must be at least 15 °C less than ambient and medium temperature and may not exceed 3 °C.

The oil content of compressed air must remain constant during the life cycle.

Use only the approved oils from AVENTICS. Further information can be found in the “Technical information” document (available in https://www.emerson.com/en-us/support).

## RCM-6/.../-25

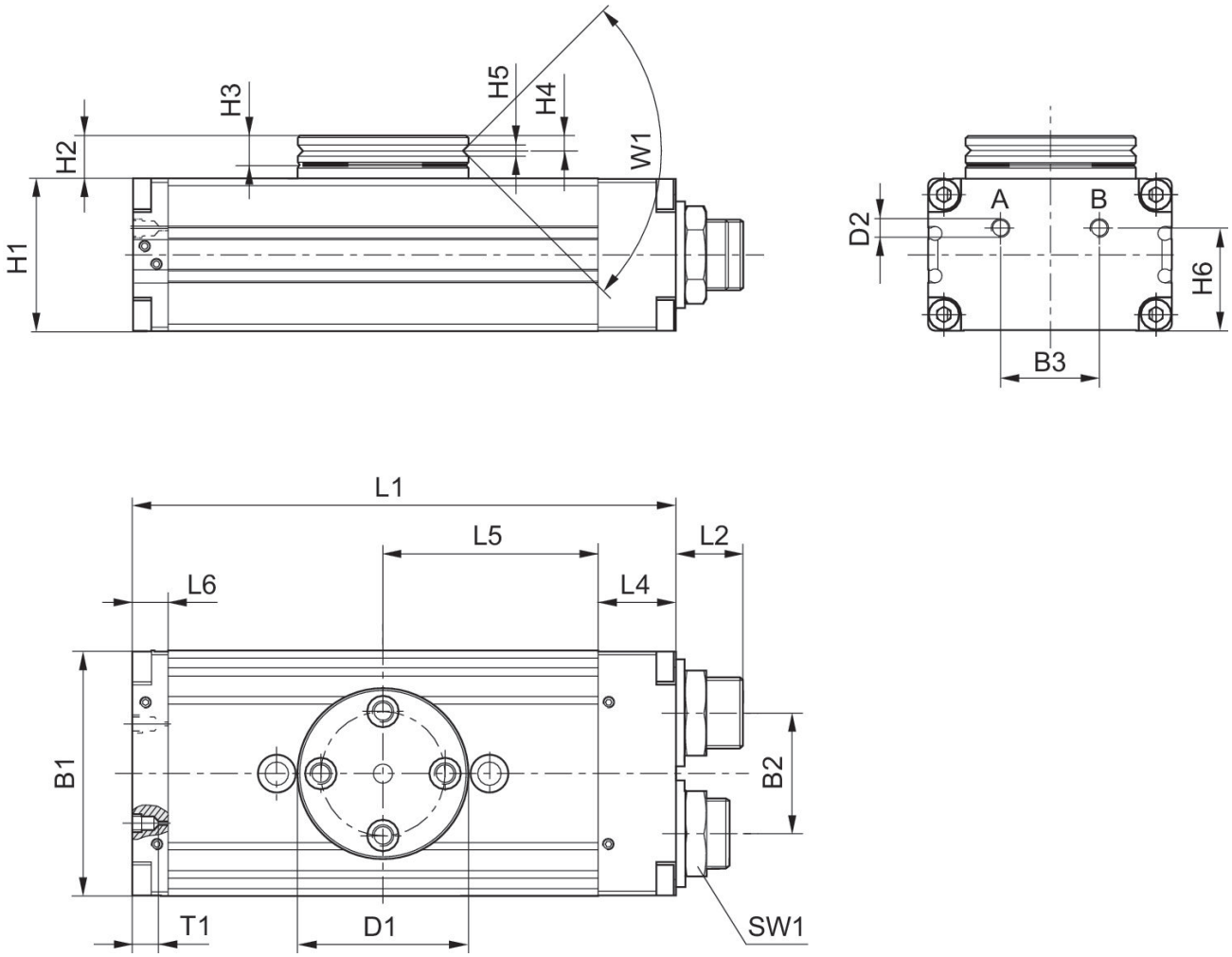


T1 = depth of thread

| Frame size | Part No. | B1 | B2 | B3 | Ø D1 | Ø D2 | H1 | H2 | H3 | H4 |
|---|---|---|---|---|---|---|---|---|---|---|
| RCM-16 | R412000363 | 52 | 24 | 20 | 40 | M5 | 32 | 10 | 7 | 3,3 |
| RCM-16 | R412000364 | 52 | 24 | 20 | 40 | M5 | 32 | 10 | 7 | 3,3 |
| RCM-20 | R412000365 | 58 | 30 | 20 | 42 | M5 | 37 | 11 | 7 | 3,3 |
| RCM-20 | R412000366 | 58 | 30 | 20 | 42 | M5 | 37 | 11 | 7 | 3,3 |
| RCM-25 | **R412000367** | 69 | 34 | 28 | 48 | M5 | 43 | 12 | 8 | 4 |
| RCM-25 | R412000368 | 69 | 34 | 28 | 48 | M5 | 43 | 12 | 8 | 4 |

| Frame size | H5 | H6 | L1 | L2 | L4 | L5 | L6 | SW1 | T1 | W1 |
|---|---|---|---|---|---|---|---|---|---|---|
| RCM-16 | 2.5 | 21 | 108 | 15 | 18 | 40 | 10 | 19 | 4 | 90° |
| RCM-16 | 2.5 | 21 | 108 | 15 | 18 | 40 | 10 | 19 | 4 | 90° |
| RCM-20 | 3 | 26 | 114 | 15 | 19 | 43 | 9 | 19 | 4 | 90° |
| RCM-20 | 3 | 26 | 114 | 15 | 19 | 43 | 9 | 19 | 4 | 90° |
| RCM-25 | 3 | 29 | 153 | 19 | 22 | 60.5 | 10 | 23 | 4 | 90° |
| RCM-25 | 3 | 29 | 153 | 19 | 22 | 60.5 | 10 | 23 | 4 | 90° |

## Mounting and assembly

RCM-16/.../-25

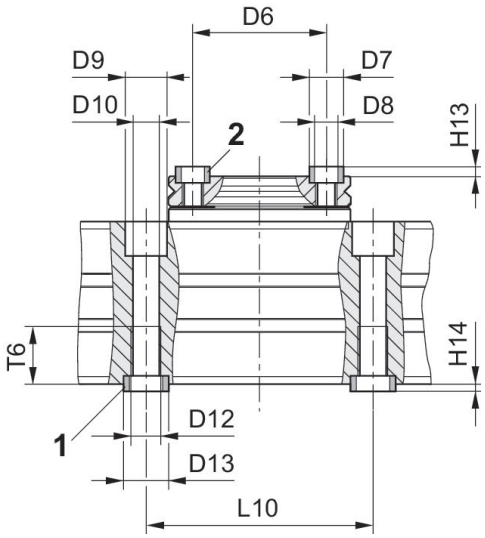


1) centering sleeve, included in the scope of delivery 2) centering sleeve

| Frame size | Part No. | Ø D6 ±0,02 | Ø D7 k6 | Ø D8 | Ø D9 | Ø D10 | Ø D11 | Ø D12 | Ø D13 k6 | H13 +0,2 |
|---|---|---|---|---|---|---|---|---|---|---|
| RCM-16 | R412000363 | 30 | 7 | M5 | 10 | 5 | – | M6 | 9 | 1.6 |
| RCM-16 | R412000364 | 30 | 7 | M5 | 10 | 5 | – | M6 | 9 | 1.6 |
| RCM-20 | R412000365 | 30 | 7 | M5 | 11 | 6.8 | – | M8 | 12 | 1.6 |
| RCM-20 | R412000366 | 30 | 7 | M5 | 11 | 6.8 | – | M8 | 12 | 1.6 |
| RCM-25 | **R412000367** | 35 | 9 | M6 | 11 | 6.8 | – | M8 | 12 | 2.1 |
| RCM-25 | R412000368 | 35 | 9 | M6 | 11 | 6.8 | – | M8 | 12 | 2.1 |

| Frame size | H14 +0,2 | L9 | L10 ± 0,02 | T5 | T6 |
|---|---|---|---|---|---|
| RCM-16 | 2.1 | – | 60 | – | 11.1 |
| RCM-16 | 2.1 | – | 60 | – | 11.1 |
| RCM-20 | 2.1 | – | 60 | – | 15.1 |
| RCM-20 | 2.1 | – | 60 | – | 15.1 |
| RCM-25 | 2.1 | – | 60 | – | 15.1 |
| RCM-25 | 2.1 | – | 60 | – | 15.1 |