Series AF2 flow rate sensor, IO-Link

G653AVBP6JA000N

Series AF2

The AVENTICS Series AF2 are flow sensors that monitor air consumption in pneumatic systems, enabling rapid intervention in the event of leakage. The Series AF2 helps to optimize energy consumption, prevent machine downtime and cut costs.



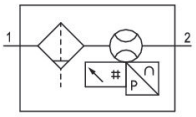

Technical data

Industry	Industrial
Note	Output signal: 1 analog output 4 mA ... 20 mA + 1 digital/analog output (PNP, NPN, push-pull, 4 mA ... 20 mA/switchable) + 1 digital output (PNP, NPN, push-pull, switchable), IO-Link V1.1 (COM3/230K4 baud) Without mounting
Frame size	653
Switching principle	Flow measuring principle: calorimetric
Protocol	IO-Link
Nominal flow	4328 l/min
Nominal flow Qn min., standard	22 l/min
Nominal flow Qn max., standard	4328 l/min
Nominal flow Qn min., extended	4328 l/min
Nominal flow Qn max., extended	6490 l/min
Compressed air connection	G 1
Certificates	CE declaration of conformity RoHS
Min. working pressure	0 bar
Max. working pressure	16 bar
Min. ambient temperature	-20 °C
Max. ambient temperature	50 °C
Min. medium temperature	-20 °C
Max. medium temperature	50 °C
Medium	Compressed air

	Argon Nitrogen Carbon dioxide
Filter porosity	5 µm
Display	OLED
Flow display unit	l/sec l/min m³/min m³/h ft³/s m³/min
Pressure display unit	bar psi
Temperature display unit	°C °F
Electrical connection 2, type	Plug
Electrical connection 2, thread size	M12x1
Electrical connection 2, number of poles	5-pin
Electrical connection 2, coding	A-coded
Output signal	PNP/NPN/push-pull, switchable
Output signal digital	PNP/NPN/push-pull, switchable
Output signal analog	4 ... 20 mA
Max. power consumption	12 W
Operational voltage	17-30 V DC
Min. operating voltage DC	17 V DC
Max. operating voltage DC	30 V DC
Response time	< 0.3 s
Short circuit resistance	short circuit resistant
Max. shock resistance	30 g, 11 ms
Vibration resistance	1 g (10 - 2000 Hz) IEC 60068 - 2-6
Reproducibility	± 1.5% of the measured value
Protection class	IP65 IP67 according to IEC 60529
Weight	2.306 kg

Material

Housing material	Polyamide Polycarbonate Aluminum
Seal material filter	Nitrile butadiene rubber
Seal material sensor	Fluorocarbon caoutchouc
Part No.	G653AVBP6JA000N

Technical information

The pressure dew point must be at least 15 °C less than ambient and medium temperature and may not exceed 3 °C.

The protection class is only ensured when the plug is mounted properly. For detailed information, see operating instructions.

Liquid oil or water must be separated via prefiltering. If it is not separated sufficiently, drifting may result.

5 microns - ±4% of measured value + 0.5% of standard full scale ±8% of measured value + 1% of extended full scale

The pressure dew point must be at least 15 °C less than ambient and medium temperature and may not exceed 3 °C.

The oil content of compressed air must remain constant during the life cycle.

Use only the approved oils from AVENTICS. Further information can be found in the “Technical information” document (available in https://www.emerson.com/en-us/support).

Dimensions

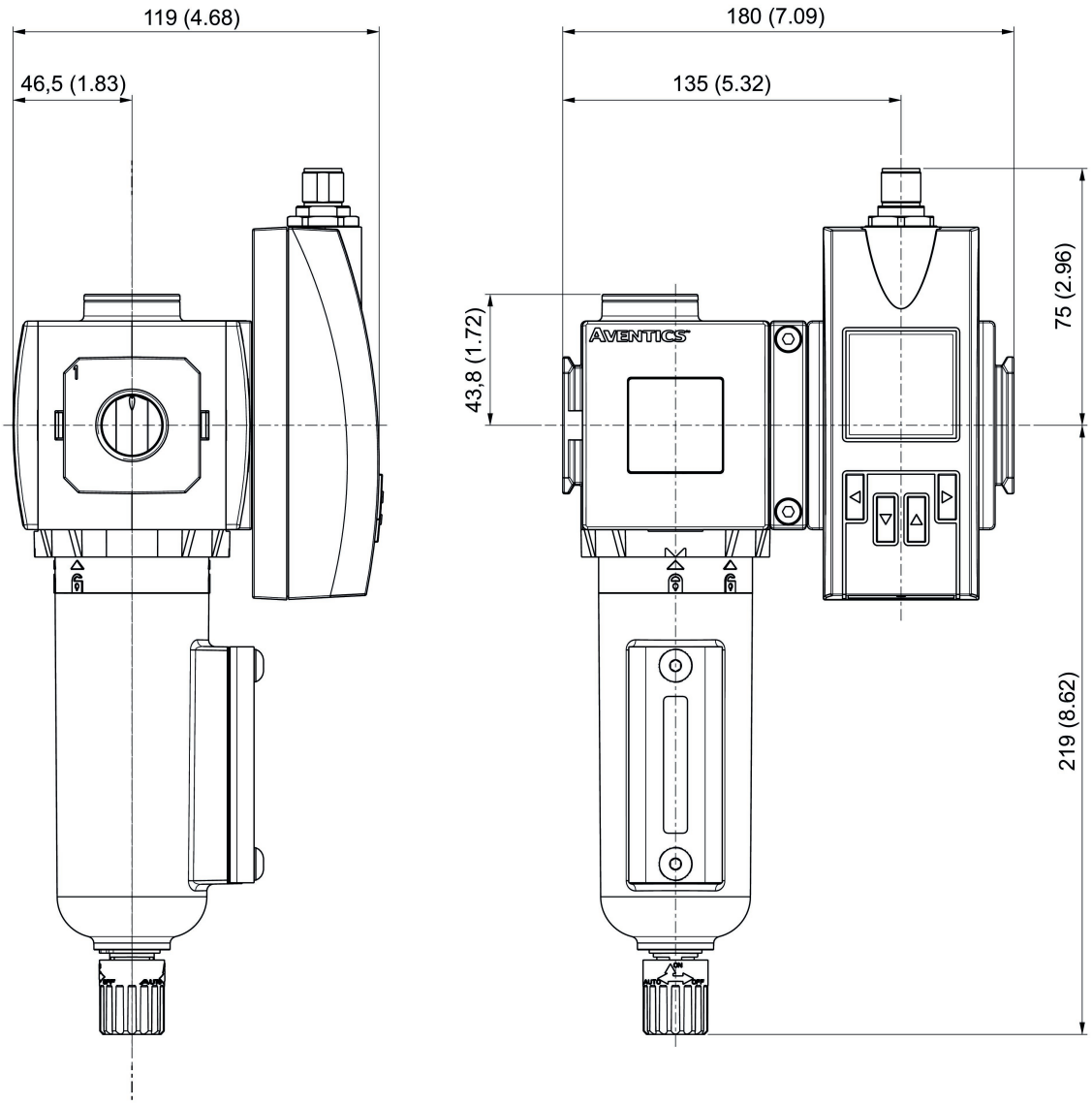

Pin assignments

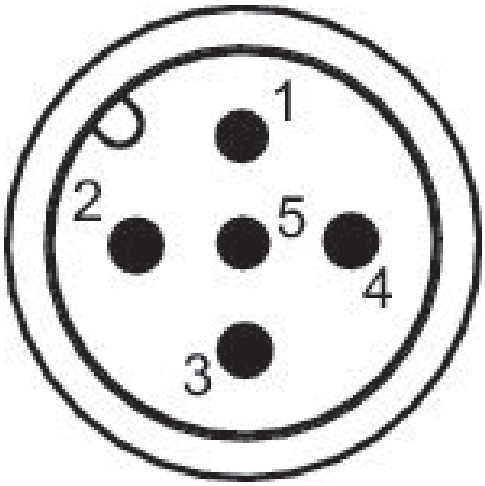

Pin assignments

Pin	Allocation	Wire color
1	L+ Supply Voltage	brown
2	QA (output 4 ... 20 mA)	white
3	m = mass	blue
4	C/Q1 (IO-Link/switch output)	black
5	Analog output 4 ... 20 mA	yellow