Filter, Series MU1-FLS

9155520220

General series information
Series MU1

- The AVENTICS Series MU1 components are ideal for applications in harsh environments. They offer large thread connections to guarantee a high compressed air flow rate and provide reliable filtration, regulation and lubrication.



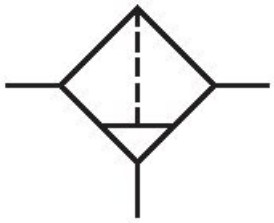

Technical data

Industry	Industrial
Type	Standard filter
Parts	Filter
Reservoir	Metal reservoir without window
Port	G 1
Filter porosity	40 µm
Nominal flow Qn	12500 l/min
Condensate drain	fully automatic, open without pressure
Working pressure min.	0 bar
Working pressure max	25 bar
Min. ambient temperature	-10 °C
Max. ambient temperature	60 °C
Medium	Compressed air Neutral gases

Filter reservoir volume	300 cm³
Filter element	exchangeable
Weight	1.5 kg
Mounting orientation	vertical

Material

Housing material	Die cast zinc
Seal material	Acrylonitrile butadiene rubber
Material reservoir	Polycarbonate
Material filter insert	Polyethylene
Part No.	9155520220

Technical information

The pressure dew point must be at least 15 °C under ambient and medium temperature and may not exceed 3 °C .

mounting: for installing in piping or via 2 through-holes in housing

Nominal flow Qn with secondary pressure p2 = 6 bar at Δp = 1 bar

Dimensions

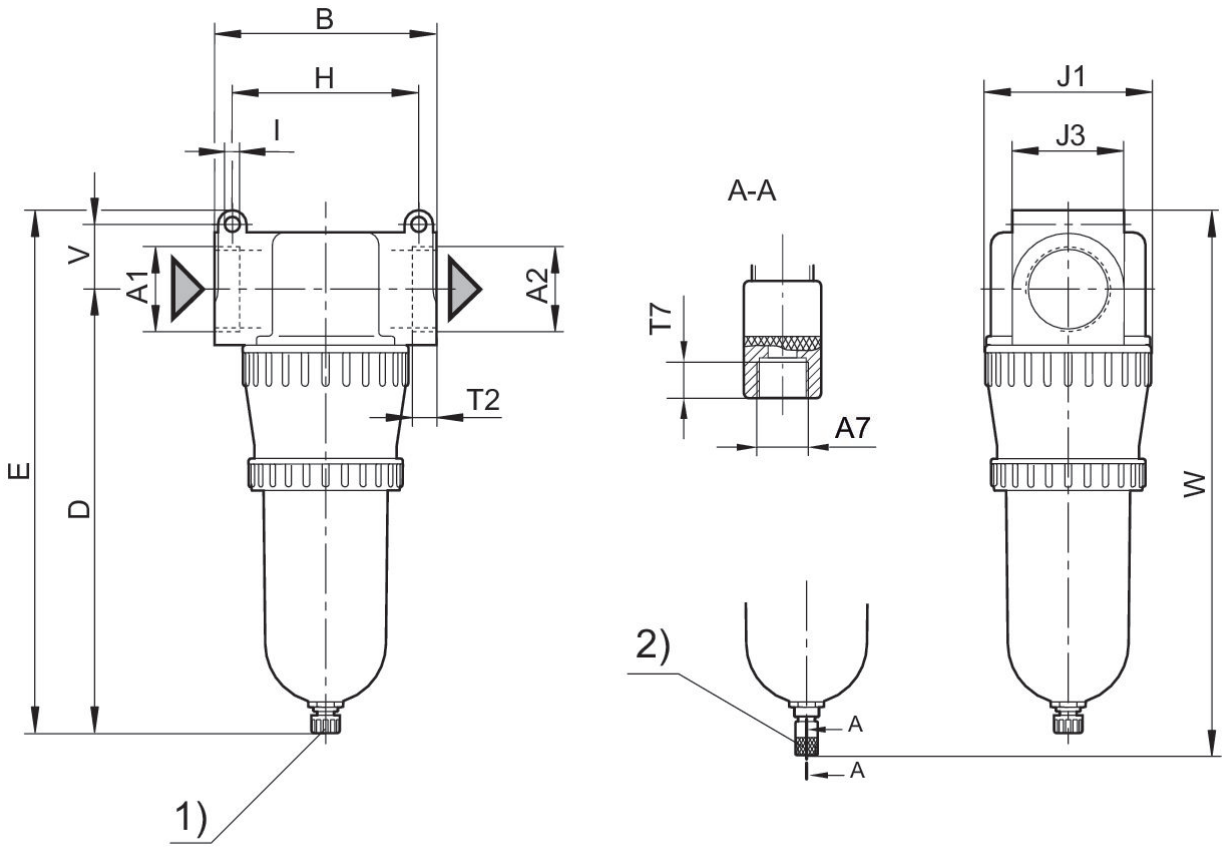

1) manual + semi-automatic condensate drain 2) fully automatic condensate drain

Part No.	A1	A2	A7	B ±7	D ±7	E ±7	H	I	J1
R412007587	G 1	G 1	G 1/8	125	250	286.5	105	8.5	100
9155520220	G 1	G 1	G 1/8	125	250	286.5	105	8.5	100
R412007588	G 1 1/4	G 1 1/4	G 1/8	125	250	286.5	105	8.5	100
R412006583	G 1 1/4	G 1 1/4	G 1/8	125	250	286.5	105	8.5	100
R412006565	G 1 1/4	G 1 1/4	G 1/8	125	250	286.5	105	8.5	100
R412007599	G 1 1/2	G 1 1/2	G 1/8	125	250	286.5	105	8.5	100
R412006566	G 1 1/2	G 1 1/2	G 1/8	125	250	286.5	105	8.5	100

Part No.	J3	T2	T7	V ±5	W ±7
R412007587	63	25	8.5	36.5	307
9155520220	63	25	8.5	36.5	307
R412007588	63	25	8.5	36.5	307
R412006583	63	25	8.5	36.5	307
R412006565	63	25	8.5	36.5	307
R412007599	63	25	8.5	36.5	307

Part No.	J3	T2	T7	V ±5	W ±7
R412006566	63	25	8.5	36.5	307

Flow rate characteristic, p2 = 0,05 - 7 bar

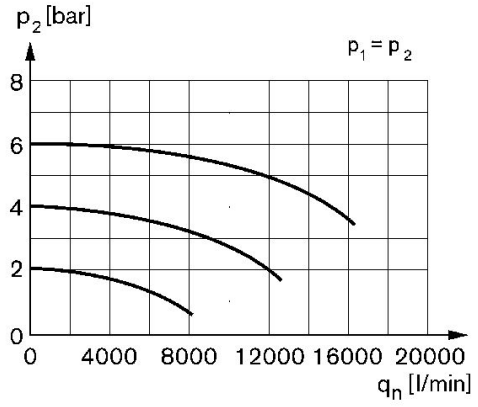

p2 = secondary pressure qn = nominal flow