Round plug connector, Series CON-RD

8946203442

AVENTICS Series CON-RD Round plug connectors with cable

The AVENTICS Series CON-RD-with cable offers cables with round plug connectors for various types like M8x1, M12x1 or 7/8-16UNC and different cable length, optimized for our focused valves with M8x1 or M12x1 connection and electronic systems like AES and G3.

- Round plug connectors with connected cable
- M8x1, M12x1, M23, 7/8"
- Y cable



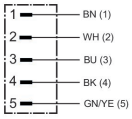

Technical data

Industry	Industrial
Type	Round plug connectors
Cable	with cable
Electrical connection 1, type	Plug
Electrical connection 1, thread size	M12x1
Electrical connection 1, number of poles	5-pin
Electrical connection 1, coding	A-coded
Cable exit 1	straight
Cable exit angle	180°
Electrical connection 2, type	open cable ends
Electrical connection 2, number of poles	5-pin
Number of wires	5
Shielding	unshielded
Cable length L	5 m
Protection class	IP68
Weight	0.238 kg

Material

Material cable sheath	Polyvinyl chloride

Round plug connector, Series CON-RD

8946203442

Part No.	8946203442

Technical information

The specified protection class is only valid in assembled and tested state.

Plug pin assignment

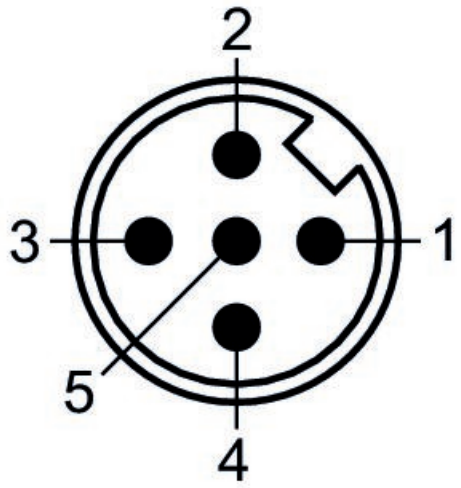

(1) BN=brown (2) WH=white (3) BU=blue (4) BK=black (5) GY=green-yellow

Dimensions

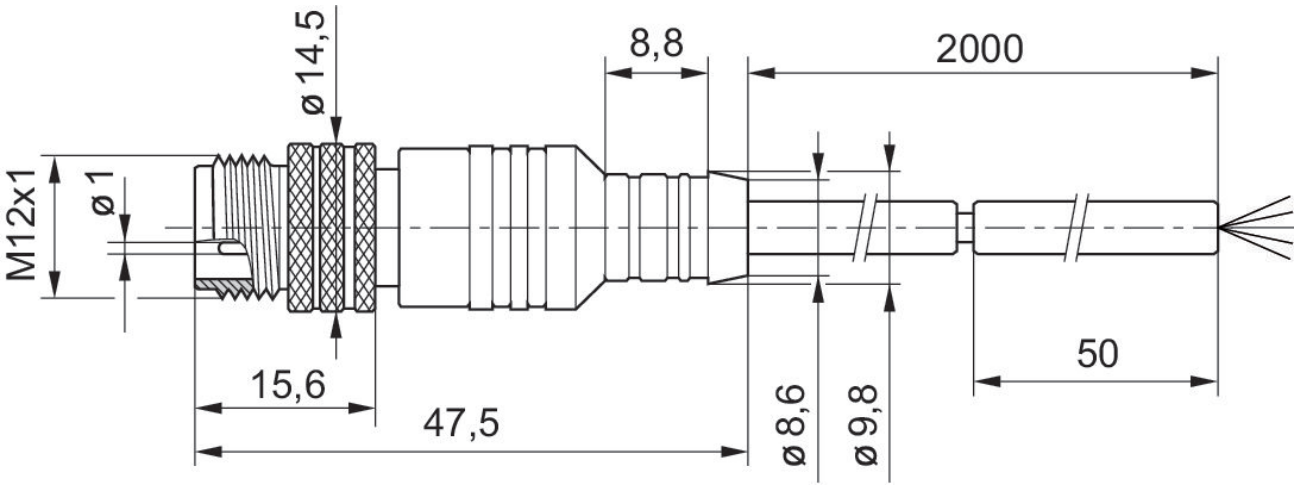

L = length