# Valve plug connector with cable series CON-VP, Form B industry, 0° female insert

**8946201912**



## AVENTICS Series CON-VP Valve plug connectors with cable

The AVENTICS Series CON-VP-with cable offers valve plug connectors with cables of various length, used to connect various valve Series and sensors. The Series covers connector types of Form A, B, B Industry, C and C Industry complying with standards EN 175301-803 (Form A), ISO 6952 (Form B) and ISO 15217 (Form C)

- Valve plug connector with connected cable
- Form A EN 175301-803
- Form B ISO 6952 and B industry
- Form C ISO 15217 and C industry
- With/without protective circuit/LED



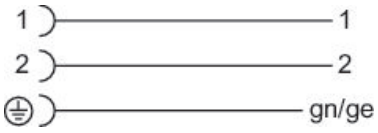


## Technical data

| | |
|---|---|
| Industry | Industrial |
| Type | Valve plugs |
| Cable | with cable |
| Electrical connection 1, type | Socket |
| Electrical connection 1, thread size | Form B, industry |
| Electrical connection 1, number of poles | 2+E |
| Cable exit 1 | angled |
| Cable exit angle | 90° |
| Electrical connection 2, type | open cable ends |
| Electrical connection 2, number of poles | 3-pin |
| Contact assignment | 2+E |
| Number of wires | 3 |
| Shielding | unshielded |
| Cable length L | 3 m |
| Protection class | IP67 |
| Min. ambient temperature | -20 °C |
| Max. ambient temperature | 80 °C |
| Max. current | 4 A |
| Wire cross-section | 0.75 mm² |

# Valve plug connector with cable series CON-VP, Form B industry, 0° female insert

8946201912

| | |
|---|---|
| Cable-Ø | 5.9 mm |
| Mounting screw tightening torque | 0.4 Nm |
| Weight | 0.02 kg |

## Material

| | |
|---|---|
| Material cable sheath | Polyvinyl chloride |
| Part No. | 8946201912 |

## Technical information

For security reasons, the valve plug connector must be plugged properly and centrically.
The specified protection class is only valid in assembled and tested state.

# Valve plug connector with cable series CON-VP, Form B industry, 0° female insert

8946201912



## Dimensions

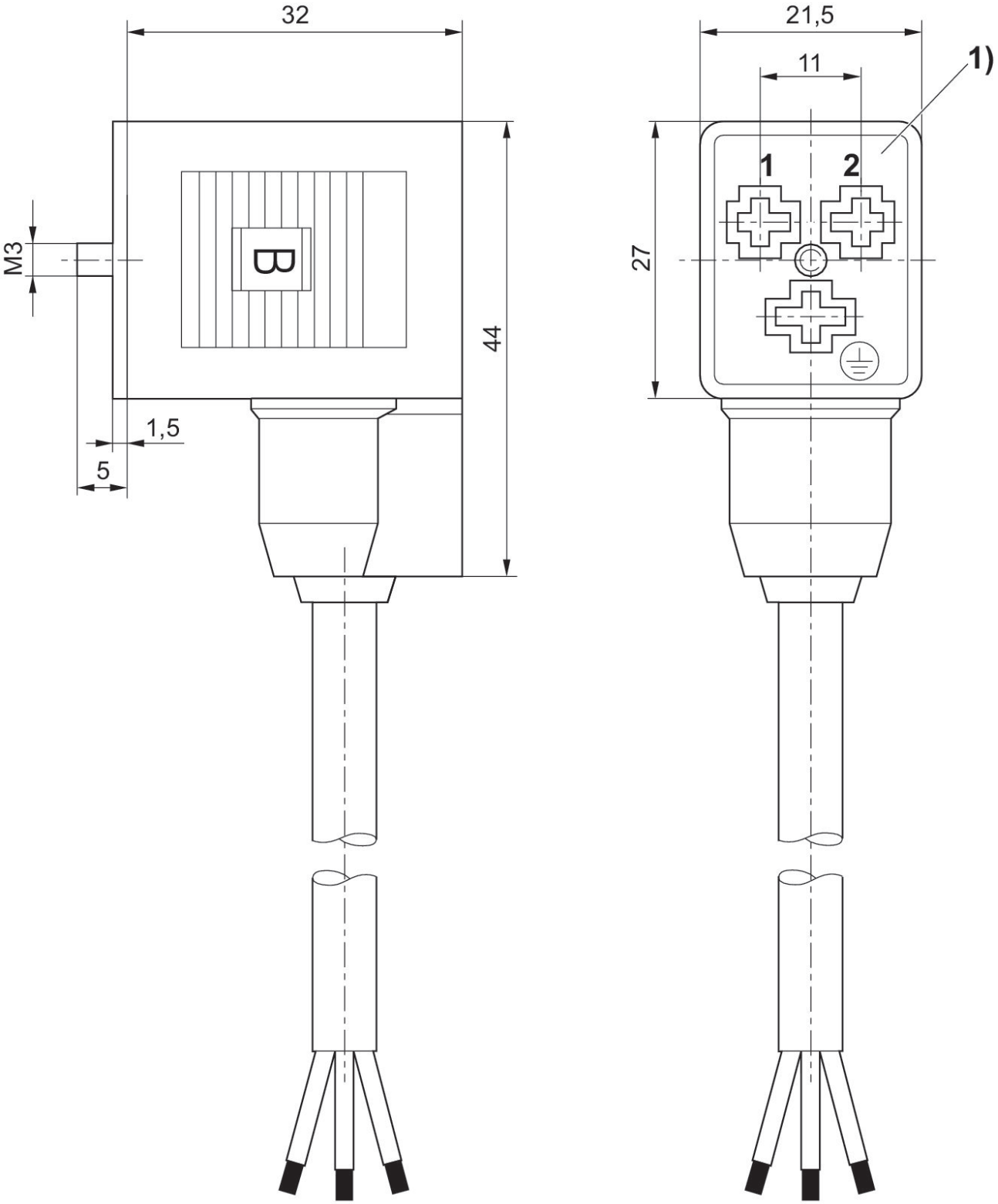


1) 0° female insert