# 3/2-directional valve, Series 567

**5672510000**

## Series 563, 565, 567

The AVENTICS Series 563/565/567 have an aluminium housing, and are suited for assembly on single or manifold subbases and offer flow rate performances of up to 13620 l/min with a working pressure of up to 30 bar.

- Robust aluminium housing
- Block assembly
- Suitable for high flow rate / high working pressure
- Ideal for harsh environments
- Application temperature up to 120°C for versions with pneumatic operation



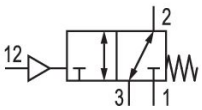


## Technical data

| | |
|---|---|
| Industry | Industrial |
| Activation | Pneumatically |
| Valve type | Poppet valve |
| Switching principle | 3/2 NC, with spring return |
| Connection type | Plate connection |
| Compressed air connection input | G 1 |
| Compressed air connection output | G 1 |
| Nominal flow Qn | 13620 l/min |
| Min. working pressure | -1 bar |
| Max. working pressure | 10 bar |
| Min. control pressure | 3.5 bar |
| Max. control pressure | 10 bar |
| Min. ambient temperature | -20 °C |
| Max. ambient temperature | 120 °C |
| Min. medium temperature | -20 °C |
| Max. medium temperature | 120 °C |

# 3/2-directional valve, Series 567

5672510000

| | |
|---|---|
| Medium | Compressed air |
| Min. oil content of compressed air | 0 mg/m³ |
| Max. oil content of compressed air | 5 mg/m³ |
| Max. particle size | 5 µm |
| Weight | 1.8 kg |

## Material

| | |
|---|---|
| Housing material | Aluminum |
| Seal material | Acrylonitrile butadiene styrene<br>Fluorocarbon caoutchouc |
| Part No. | 5672510000 |

## Technical information

The min. control pressure must be adhered to, since otherwise faulty switching and valve failure may result!

The pressure dew point must be at least 15 °C less than ambient and medium temperature and may not exceed 3 °C.

The oil content of compressed air must remain constant during the life cycle.

Use only the approved oils from AVENTICS. Further information can be found in the “Technical information” document (available in https://www.emerson.com/en-us/support).

## Dimensions

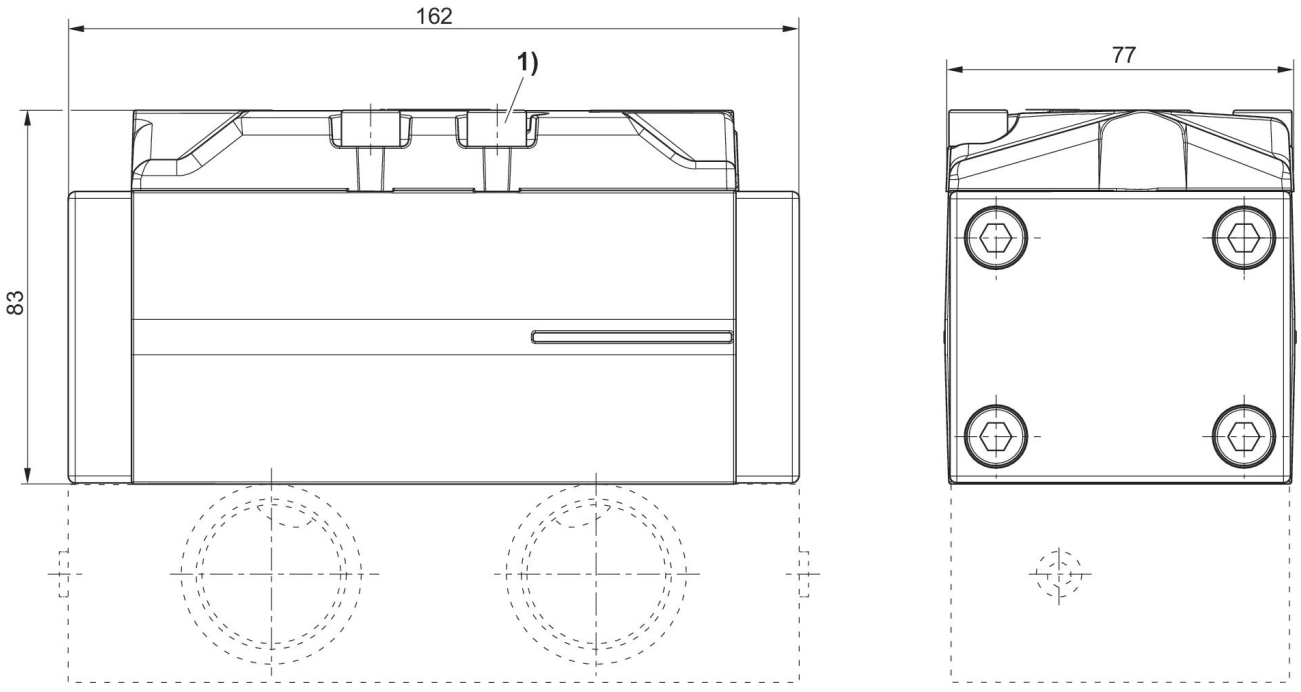


1) Tightening torque for mounting screws: 22 ± 2 Nm
Base plate not included in the scope of delivery