3/2-directional valve, Series 565

5652510000

Series 563, 565, 567

The AVENTICS Series 563/565/567 have an aluminium housing, and are suited for assembly on single or manifold subbases and offer flow rate performances of up to 13620 l/min with a working pressure of up to 30 bar.

- Robust aluminium housing
- Block assembly
- Suitable for high flow rate / high working pressure
- Ideal for harsh environments
- Application temperature up to 120°C for versions with pneumatic operation



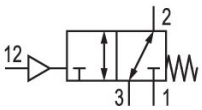

Technical data

Industry	Industrial
Activation	Pneumatically
Valve type	Poppet valve
Switching principle	3/2 NC, with spring return
Connection type	Plate connection
Compressed air connection input	G 1/2
Compressed air connection output	G 1/2
Nominal flow Qn	4240 l/min
Min. working pressure	-1 bar
Max. working pressure	10 bar
Min. control pressure	3.5 bar
Max. control pressure	10 bar
Temperature resistance	Heat resistant
Min. ambient temperature	-20 °C
Max. ambient temperature	120 °C
Min. medium temperature	-20 °C

Max. medium temperature	120 °C
Medium	Compressed air
Min. oil content of compressed air	0 mg/m³
Max. oil content of compressed air	5 mg/m³
Max. particle size	5 µm
Weight	0.55 kg

Material

Housing material	Aluminum
Seal material	Acrylonitrile butadiene styrene Fluorocarbon caoutchouc
Part No.	5652510000

Technical information

The min. control pressure must be adhered to, since otherwise faulty switching and valve failure may result!

The pressure dew point must be at least 15 °C less than ambient and medium temperature and may not exceed 3 °C.

The oil content of compressed air must remain constant during the life cycle.

Use only the approved oils from AVENTICS. Further information can be found in the “Technical information” document (available in https://www.emerson.com/en-us/support).

Dimensions

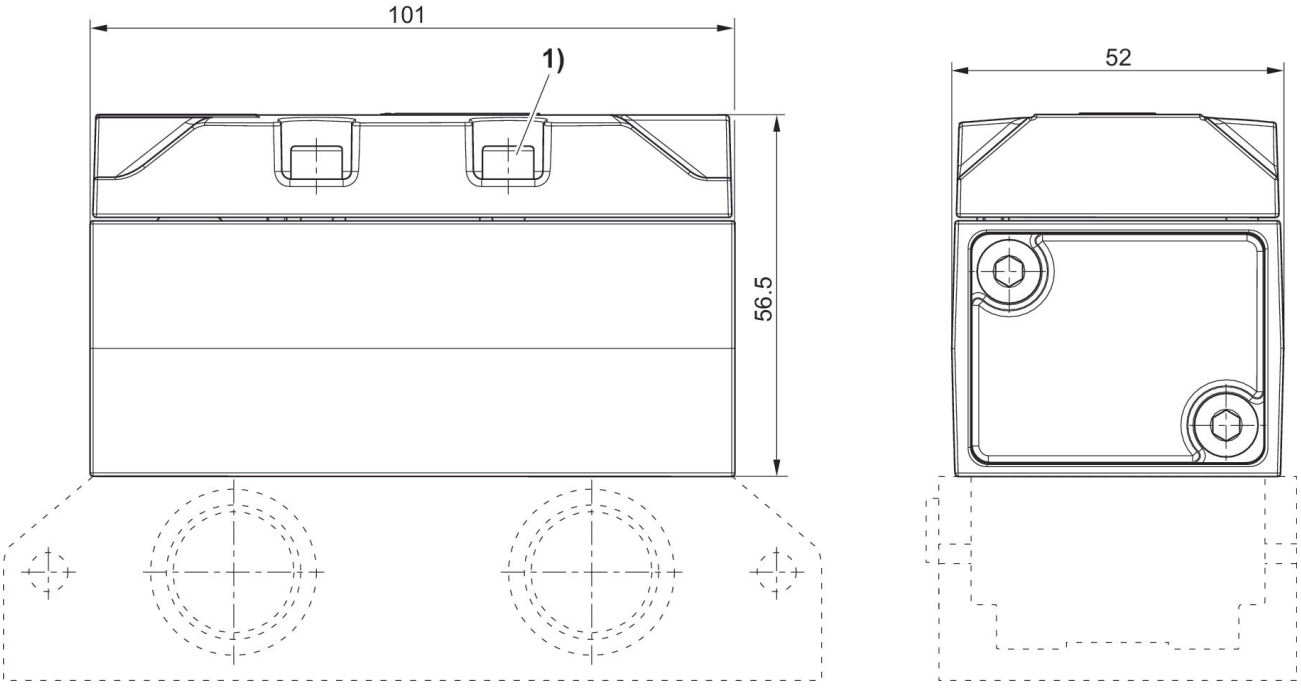

1) Tightening torque for mounting screws: 5.5 ± 0.5 Nm
Base plate not included in the scope of delivery