5/2-directional valve, Series CD07, Button

5634669200

Series
CD07

2025-12-08

AVENTICS Series CD07 Directional valves

Qn = 1200 ... 1400 l/min

- Durable design
- Assembly on base plate
- Suitable for extreme ambient temperatures
- Resistant to voltage fluctuations
- ATEX version available



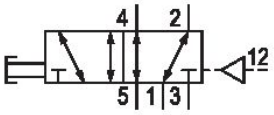

Technical data

Industry	Industrial
Activation	Mechanically operated
Frame size	CD07
Valve type	Spool valve, positive overlapping
Switching principle	5/2, with pneumatic return
Plate connection	Pipe connection
Actuating element	Button
Sealing principle	Soft seal

Compressed air connection type	Internal thread
Compressed air connection input	G 1/4
Compressed air connection output	G 1/4
Compressed air connection, exhaust	G 1/4
Compressed air connection pilot input	G 1/8
Nominal flow Qn	1200 l/min
Min. working pressure	-0.95 bar
Max. working pressure	10 bar
Min. control pressure	5 bar
Max. control pressure	10 bar

Min. actuating force	80 N
Certificates	Suitable for ATEX
ATEX	Suitable for ATEX
Min. ambient temperature	-25 °C
Max. ambient temperature	80 °C
Min. medium temperature	-25 °C
Max. medium temperature	80 °C
Medium	Compressed air
Min. oil content of compressed air	0 mg/m³
Max. oil content of compressed air	1 mg/m³
Max. particle size	50 µm

Weight	0.54 kg

Material

Housing material	Die cast zinc
Seal material	Acrylonitrile butadiene rubber
Material actuating control	Polyoxymethylene
Part No.	5634669200

Technical information

Nominal flow Qn at 6 bar and Δp = 1 bar

The min. control pressure must be adhered to, since otherwise faulty switching and valve failure may result!

The pressure dew point must be at least 15 °C less than ambient and medium temperature and may not exceed 3 °C.

The oil content of compressed air must remain constant during the life cycle.

Use only the approved oils from AVENTICS. Further information can be found in the “Technical information” document (available in https://www.emerson.com/en-us/support).

5/2-directional valve, Series CD07, Button

5634669200

Dimensions in mm

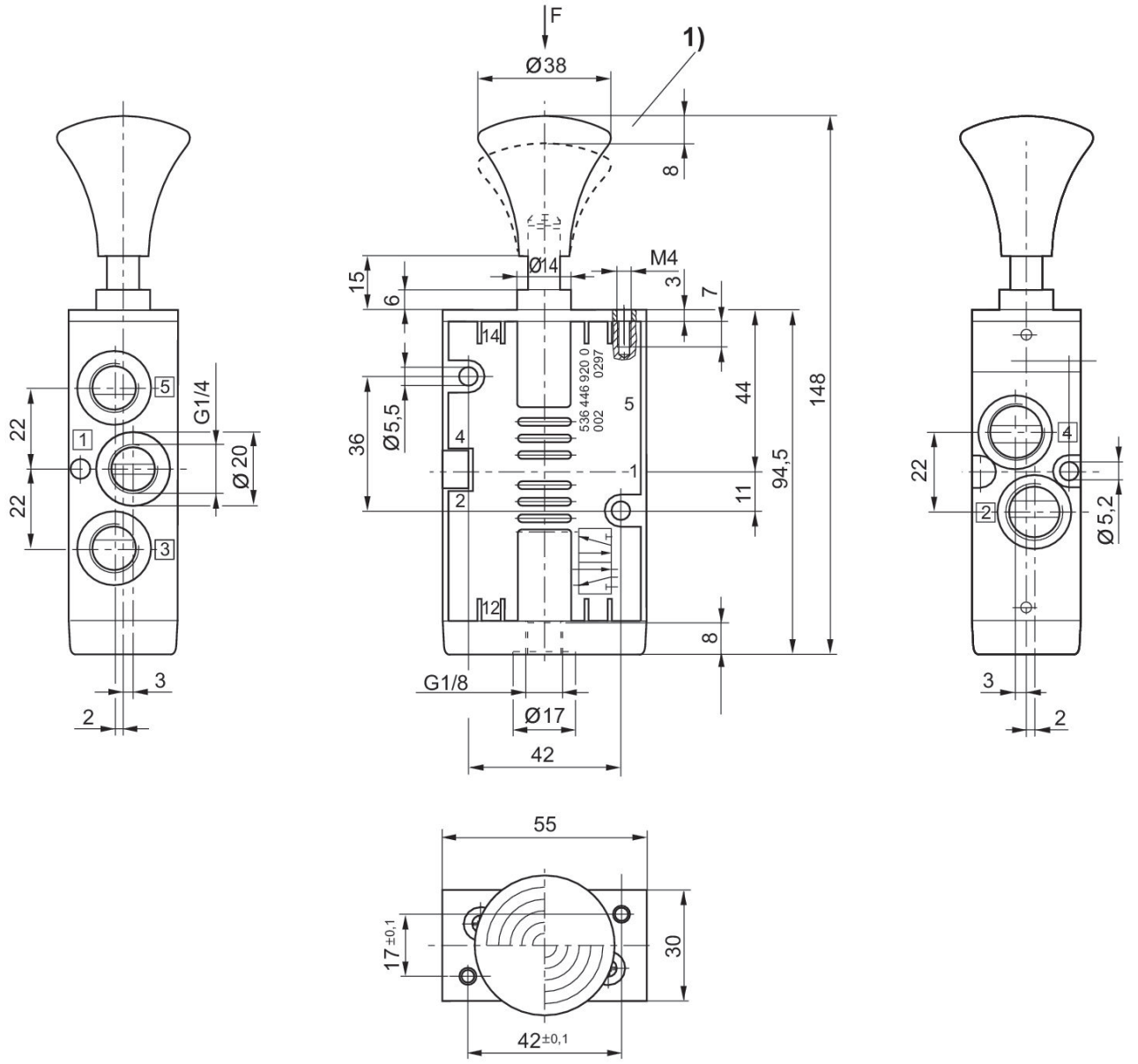

1) Stroke