3/2-directional valve, Series CD07, Button

5634461000

Series
CD07

2025-12-08

AVENTICS Series CD07 Directional valves

Qn = 1200 ... 1400 l/min

- Durable design
- Assembly on base plate
- Suitable for extreme ambient temperatures
- Resistant to voltage fluctuations
- ATEX version available



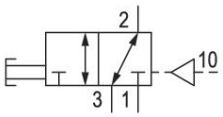

Technical data

Industry	Industrial
Activation	Mechanically operated
Frame size	CD07
Valve type	Spool valve, positive overlapping
Switching principle	3/2, with pneumatic return
Valve function	NC/NO
Plate connection	Pipe connection
Actuating element	Button
Sealing principle	Soft seal

Compressed air connection type	Internal thread
Compressed air connection input	M14x1,5
Compressed air connection output	M14x1,5
Compressed air connection, exhaust	M14x1,5
Compressed air connection pilot input	M10x1
Nominal flow Qn	1400 l/min
Min. working pressure	-0.95 bar
Max. working pressure	10 bar
Min. control pressure	2 bar

Max. control pressure	10 bar
Min. actuating force	40 N
Certificates	Suitable for ATEX
ATEX	Suitable for ATEX
Min. ambient temperature	-25 °C
Max. ambient temperature	80 °C
Min. medium temperature	-25 °C
Max. medium temperature	80 °C
Medium	Compressed air
Min. oil content of compressed air	0 mg/m³
Max. oil content of compressed air	1 mg/m³
Max. particle size	5 µm
Weight	0.45 kg

Material

Housing material	Die cast zinc
Seal material	Acrylonitrile butadiene rubber
Material actuating control	Polyoxymethylene
Part No.	5634461000

Technical information

option valve: The input and output compressed air connections can be exchanged. The valve can thereby be used in the NC or NO operating mode.

Nominal flow Qn at 6 bar and Δp = 1 bar

The min. control pressure must be adhered to, since otherwise faulty switching and valve failure may result!

The pressure dew point must be at least 15 °C less than ambient and medium temperature and may not exceed 3 °C.

The oil content of compressed air must remain constant during the life cycle.

Use only the approved oils from AVENTICS. Further information can be found in the “Technical information” document (available in https://www.emerson.com/en-us/support).

3/2-directional valve, Series CD07, Button

5634461000

Dimensions in mm (Basic valve)

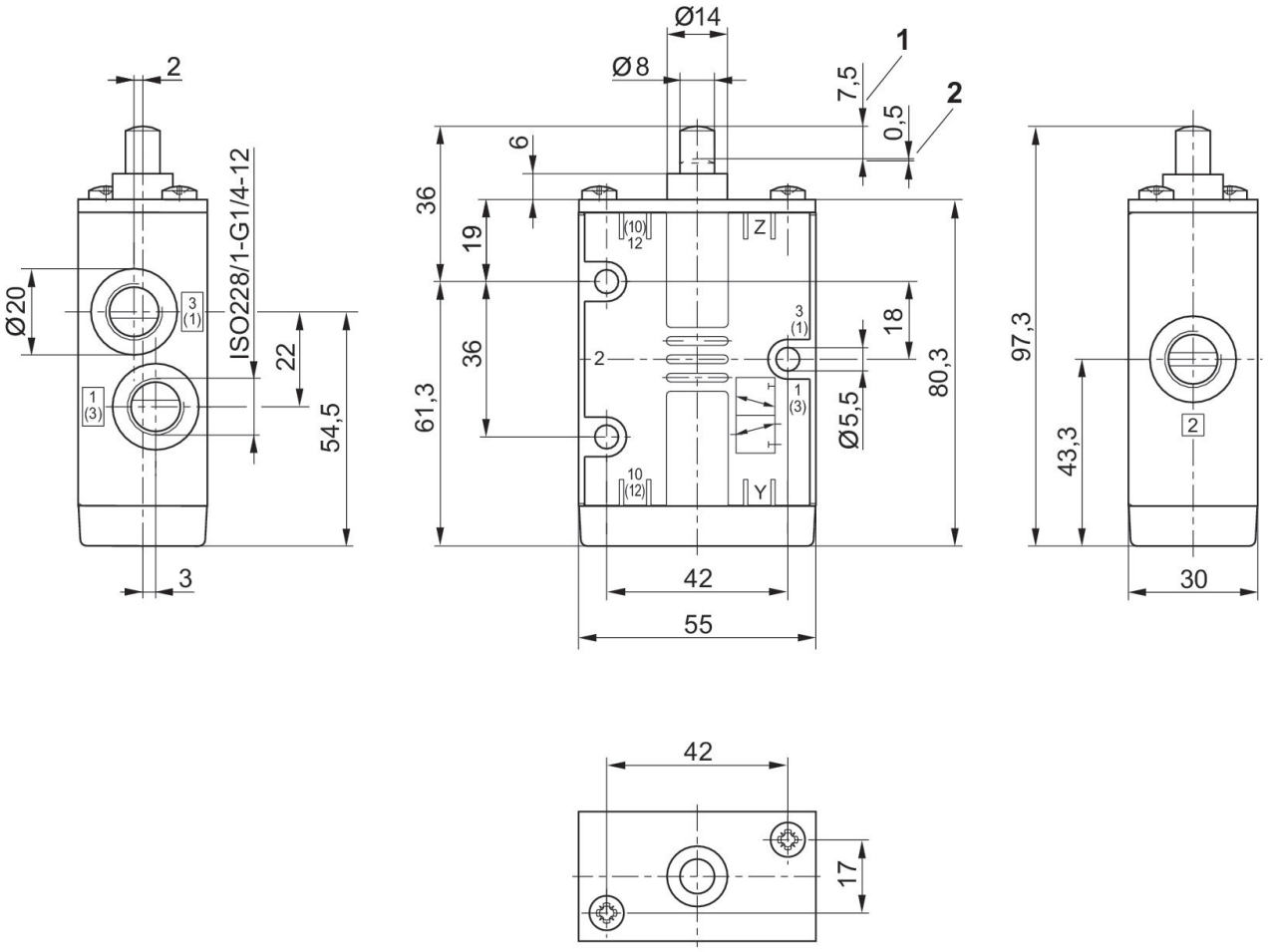

1) Stroke
2) Overstroke

3/2-directional valve, Series CD07, Button

5634461000

Dimensions in mm

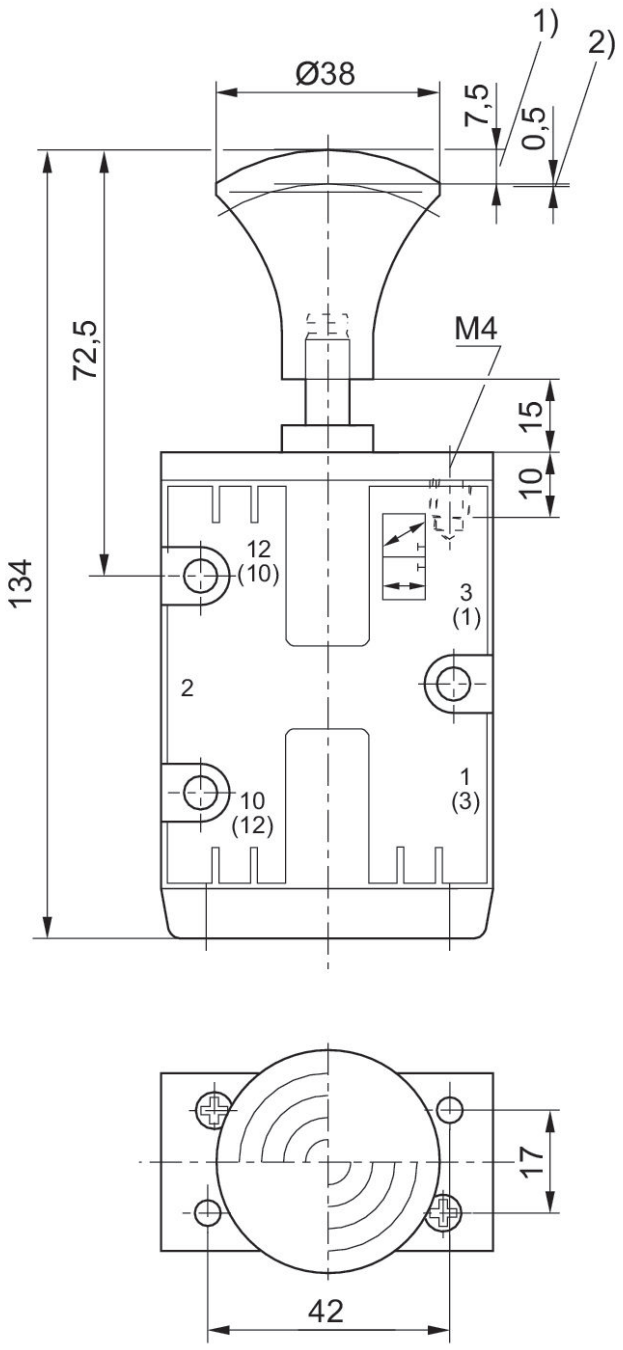

1) Stroke
2) Overstroke