# 3/2-directional valve, Series CD07, Button

**5634460100**

Series
CD07

2025-12-08

## AVENTICS Series CD07 Directional valves

Qn = 1200 ... 1400 l/min

- Durable design
- Assembly on base plate
- Suitable for extreme ambient temperatures
- Resistant to voltage fluctuations
- ATEX version available



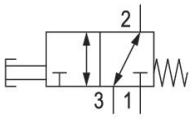


## Technical data

| | |
|---|---|
| Industry | Industrial |
| Activation | Mechanically operated |
| Frame size | CD07 |
| Valve type | Spool valve, positive overlapping |
| Switching principle | 3/2, with spring return |
| Valve function | NC/NO |
| Plate connection | Pipe connection |
| Actuating element | Button |
| Sealing principle | Soft seal |

| | |
|---|---|
| Compressed air connection type | Internal thread |
| Compressed air connection input | G 1/4 |
| Compressed air connection output | G 1/4 |
| Compressed air connection, exhaust | G 1/4 |
| Nominal flow Qn | 1400 l/min |
| Min. working pressure | -0.95 bar |
| Max. working pressure | 10 bar |
| Min. actuating force | 70 N |
| Certificates | Suitable for ATEX |

| | |
|---|---|
| ATEX | Suitable for ATEX |
| Min. ambient temperature | -25 °C |
| Max. ambient temperature | 80 °C |
| Min. medium temperature | -25 °C |
| Max. medium temperature | 80 °C |
| Medium | Compressed air |
| Min. oil content of compressed air | 0 mg/m³ |
| Max. oil content of compressed air | 1 mg/m³ |
| Max. particle size | 50 µm |
| Weight | 0.45 kg |

## Material

| | |
|---|---|
| Housing material | Die cast zinc<br>Polyamide, fiber-glass reinforced |
| Seal material | Acrylonitrile butadiene rubber |
| Material actuating control | Polyoxymethylene |
| Part No. | 5634460100 |

## Technical information

option valve: The input and output compressed air connections can be exchanged. The valve can thereby be used in the NC or NO operating mode.

Nominal flow Qn at 6 bar and Δp = 1 bar

The min. control pressure must be adhered to, since otherwise faulty switching and valve failure may result!

The pressure dew point must be at least 15 °C less than ambient and medium temperature and may not exceed 3 °C.

The oil content of compressed air must remain constant during the life cycle.

Use only the approved oils from AVENTICS. Further information can be found in the “Technical information” document (available in https://www.emerson.com/en-us/support).

# 3/2-directional valve, Series CD07, Button

5634460100



## Dimensions in mm (Basic valve)

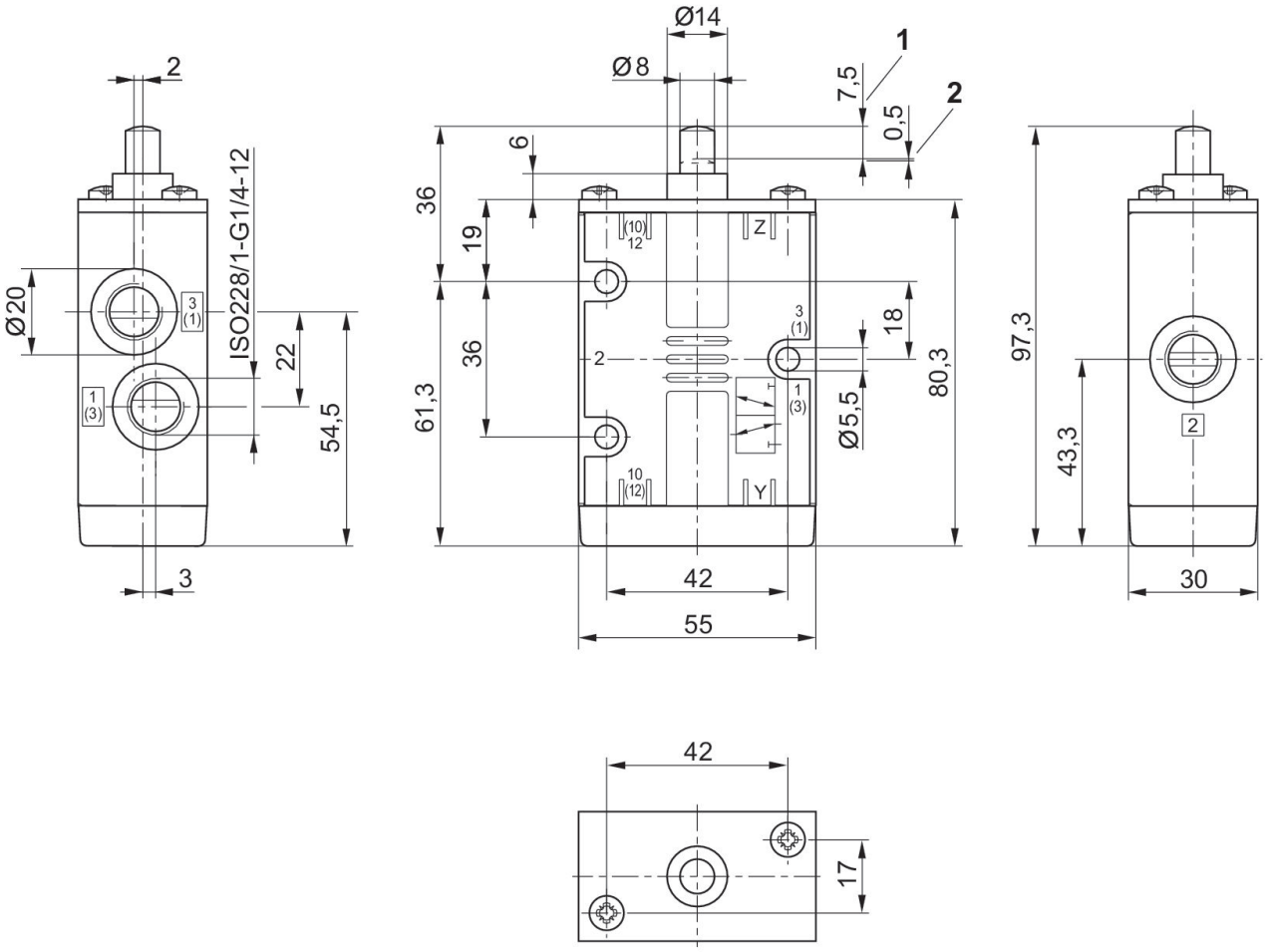


1) Stroke
2) Overstroke

# 3/2-directional valve, Series CD07, Button

5634460100



## Dimensions in mm

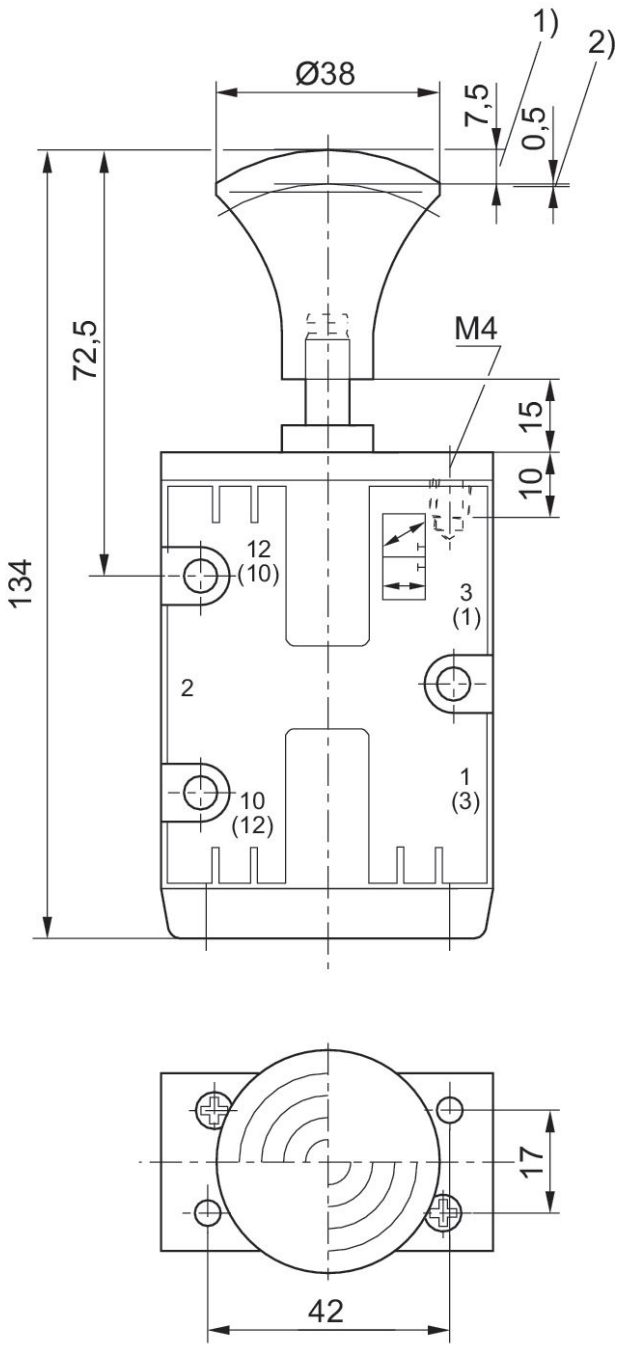


1) Stroke
2) Overstroke