3/2-directional valve, Series CD04, Button

5634060100

Series
CD04

2026-01-27

Series CD04

Qn = 900l/min

- Durable design
- Assembly on base plate
- Suitable for extreme ambient temperatures
- Resistant to voltage fluctuations
- ATEX version available



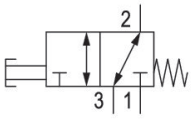

Technical data

Industry	Industrial
Activation	Mechanical
Valve type	Spool valve, positive overlapping
Switching principle	3/2, with spring return
Valve function	NC/NO
Plate connection	Pipe connection
Actuating element	Button
Sealing principle	Soft seal

Compressed air connection type	Internal thread
Compressed air connection input	G 1/8
Compressed air connection output	G 1/8
Compressed air connection, exhaust	G 1/8
Nominal flow Qn	900 l/min
Min. working pressure	-0.95 bar
Max. working pressure	10 bar
Min. actuating force	60 N
Min. ambient temperature	-20 °C
Max. ambient temperature	65 °C

Min. medium temperature	-20 °C
Max. medium temperature	65 °C
Medium	Compressed air
Min. oil content of compressed air	0 mg/m³
Max. oil content of compressed air	1 mg/m³
Max. particle size	50 µm
Weight	0.25 kg

Material

Housing material	Die cast zinc Polyamide, fiber-glass reinforced
Seal material	Acrylonitrile butadiene rubber
Material actuating control	Polyoxymethylene
Part No.	5634060100

Technical information

option valve: The input and output compressed air connections can be exchanged. The valve can thereby be used in the NC or NO operating mode.

Nominal flow Qn at 6 bar and Δp = 1 bar

The min. control pressure must be adhered to, since otherwise faulty switching and valve failure may result!

The pressure dew point must be at least 15 °C less than ambient and medium temperature and may not exceed 3 °C.

The oil content of compressed air must remain constant during the life cycle.

Use only the approved oils from AVENTICS. Further information can be found in the “Technical information” document (available in https://www.emerson.com/en-us/support).

3/2-directional valve, Series CD04, Button

5634060100

Dimensions in mm (Basic valve)

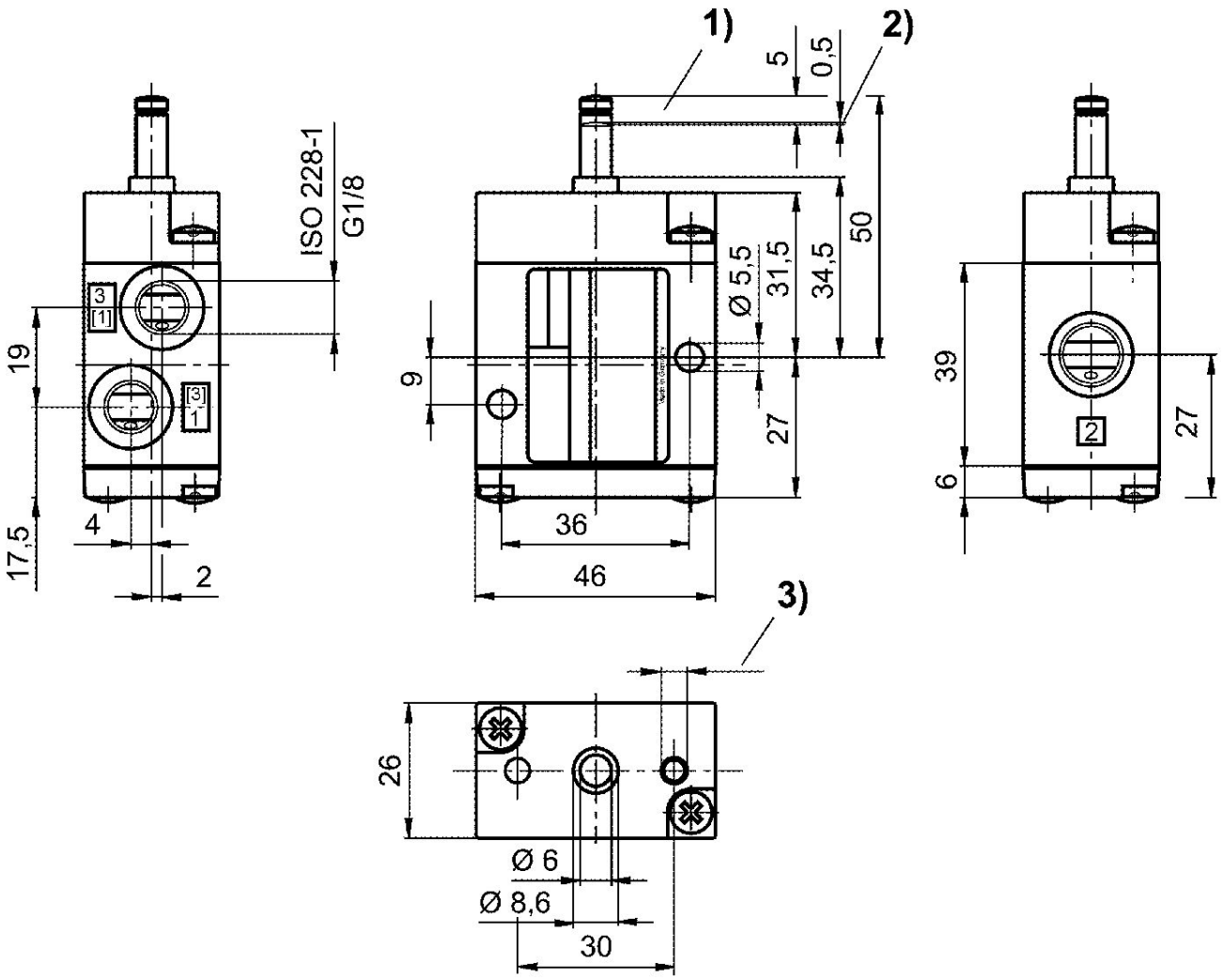

1) Stroke
2) Overstroke
3) Ø 4.5 - 12 mm deep

Dimensions in mm

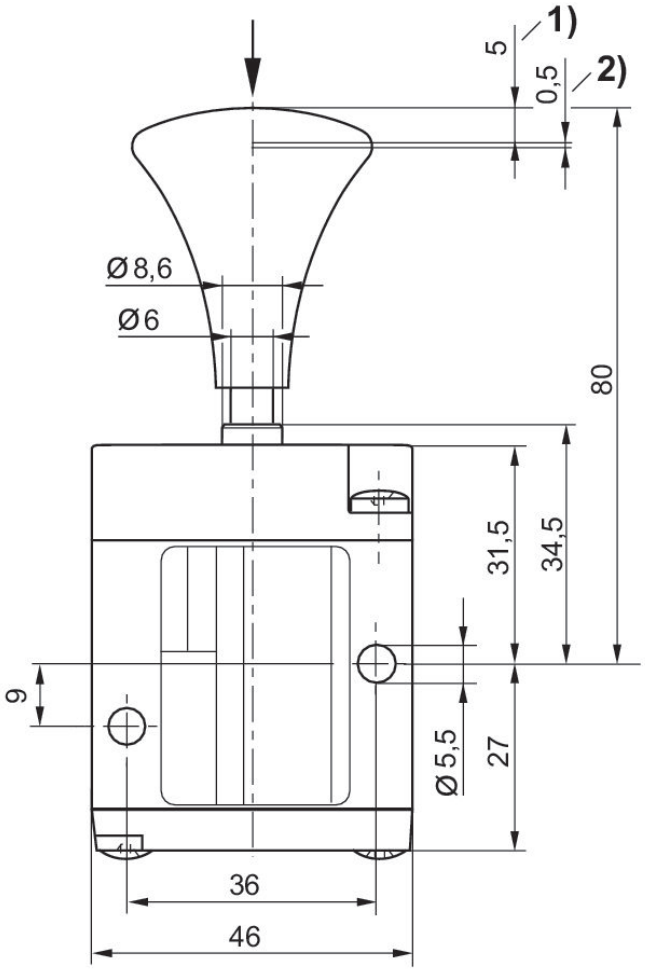

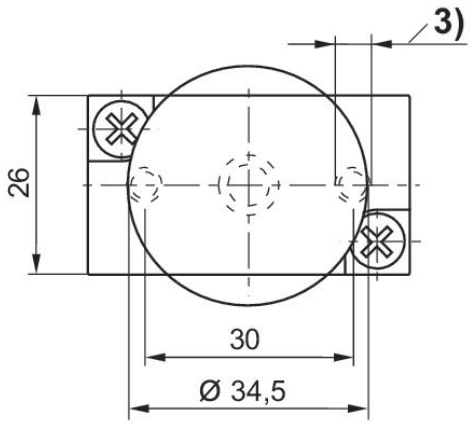

1) Stroke
2) Overstroke
3) Ø 4.5 - 12 mm deep