Rear eye MP6, aluminum

5220363442

AVENTICS Rear eyes



Technical data

Industry	Industrial
For series	AB5
Type	With ball joint and foot
Piston diameter	75 mm
Scope of delivery	Scope of delivery: clevis incl. mounting screws
Weight	0.4 kg

Material

Material	Aluminum
Screws material	Galvanized Steel
Bearing material, inner ring	Stainless Steel
Bearing material, outer ring	Brass with PTFE coating
Part No.	5220363442

Dimensions

Rear eye MP6, aluminum

5220363442

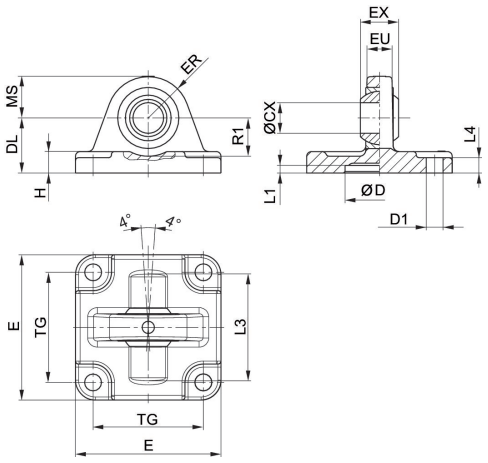

Scope of delivery: clevis incl. mounting screws

Piston Ø	Part No.	ØCX H7	ØD H11	ØD1 H13	DL ±0,2	E	EX –0,1	ER	EU	H
25	3663602000	10	18	5,5	20	40	9	14	8	6
32	3663603000	10	20	5.5	22	46	9	15	8	6
40	3663604000	12	30	6.6	28	55	12	17	9.5	8
50	3663605000	12	40	6,6	28	62	12	17	9.5	9
52,5	5220163442	10	–	7.5	29	45	14	15	10.5	8
63	3663606000	16	55	9	36	80	16	25	12,5	11
75	**5220363442**	12	–	10	26	65	16	18	12	10
80	3663608000	16	70	9	38	94	16	28	12,5	12
85, 95	5220463442	16	–	10	30	75	21	22	15	10
100	3663610000	20	90	11	43	114	20	35	16	15
115	5220563442	16	–	12	37.5	95	21	25	15	12

Piston Ø	L1 min.	L3	L4	MS -0,5	R1 min.	TG
25	3	–	3	14	–	26
32	0.5	42	6	15	16	32
40	0.5	48	8	17	16	32
50	0,5	55	9	17	18	46
52,5	–	–	–	–	–	33
63	0,5	70	11	25	21	59
75	–	–	–	–	–	49
80	0,5	80	12	28	21	73
85, 95	–	–	–	–	–	59
100	0,5	100	15	35	28	90
115	–	–	–	–	–	75