Clevis mounting AB3, Series CM1

5217133402

AVENTICS Clevis mountings

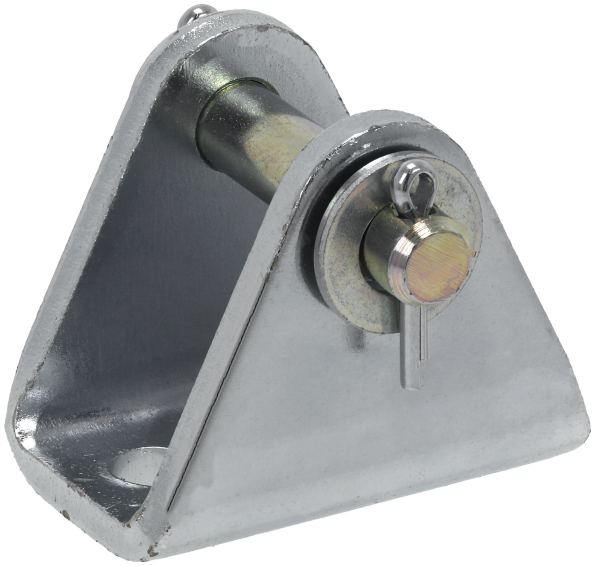

Technical data

Industry	Industrial
For series	RPC
Piston diameter	63 mm
Scope of delivery	Clevis mounting AB3, with bolt, split pin

Material

Material	Galvanized Steel
Part No.	5217133402

Dimensions

Clevis mounting AB3, Series CM1

5217133402

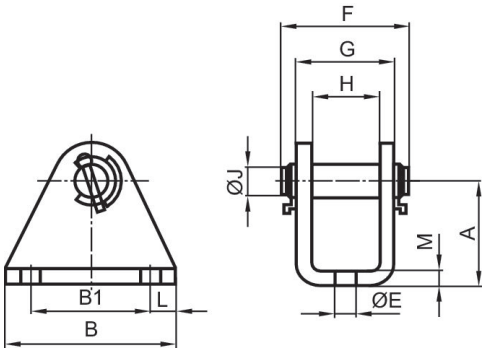

Piston Ø	Part No.	A	B	B1	Ø E	F	G	H	Ø J	L
32	5217103402	35	55	35	9	55	35.1	25.1	10	10
40	5217113402	40	55	35	9	65	40.1	30.1	12	10
50	5217123402	50	55	35	11	75	51.1	35.1	12	10
63	**5217133402**	60	65	45	11	75	51.1	35.1	16	10

Piston Ø	M
32	5
40	5
50	8
63	8