# Clevis mounting AB3, Series CM1

**5217103402**

## AVENTICS Clevis mountings

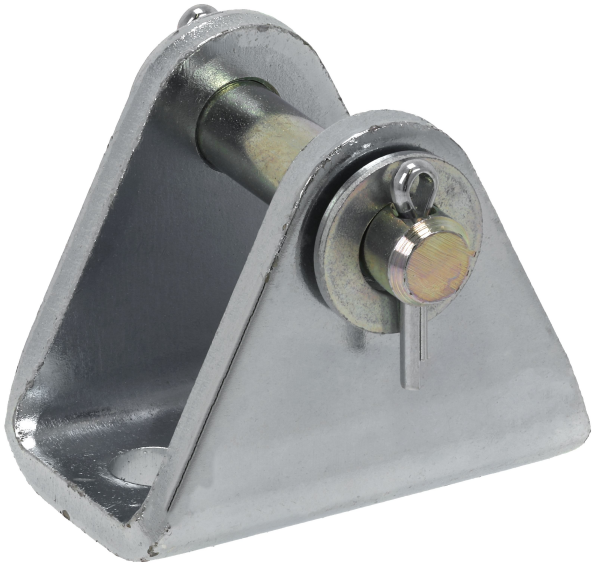

## Technical data

| | |
|---|---|
| Industry | Industrial |
| For series | RPC |
| Piston diameter | 32 mm |
| Scope of delivery | Clevis mounting AB3, with bolt, split pin |

## Material

| | |
|---|---|
| Material | Galvanized Steel |
| Part No. | 5217103402 |

## Dimensions

# Clevis mounting AB3, Series CM1

5217103402



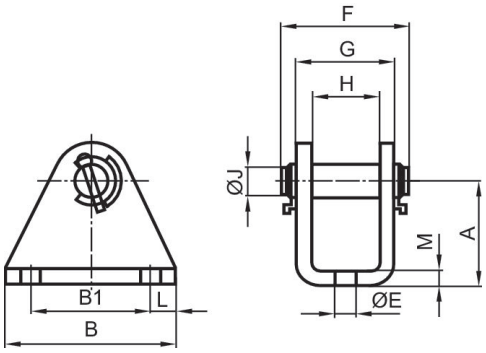


| Piston Ø | Part No. | A | B | B1 | Ø E | F | G | H | Ø J | L |
|---|---|---|---|---|---|---|---|---|---|---|
| 32 | 5217103402 | 35 | 55 | 35 | 9 | 55 | 35.1 | 25.1 | 10 | 10 |
| 40 | 5217113402 | 40 | 55 | 35 | 9 | 65 | 40.1 | 30.1 | 12 | 10 |
| 50 | 5217123402 | 50 | 55 | 35 | 11 | 75 | 51.1 | 35.1 | 12 | 10 |
| 63 | 5217133402 | 60 | 65 | 45 | 11 | 75 | 51.1 | 35.1 | 16 | 10 |

| Piston Ø | M |
|---|---|
| 32 | 5 |
| 40 | 5 |
| 50 | 8 |
| 63 | 8 |