Foot mounting MS1, Series CM1

5217020504

AVENTICS Foot mountings



Technical data

Industry	Industrial
Version	Version: standard/compact/short type
For series	RPC
Piston diameter	50 mm

Material

Material	Steel, chrome-plated
Surface	galvanized
Part No.	5217020504

Foot mounting MS1, Series CM1

5217020504

2024-08-29

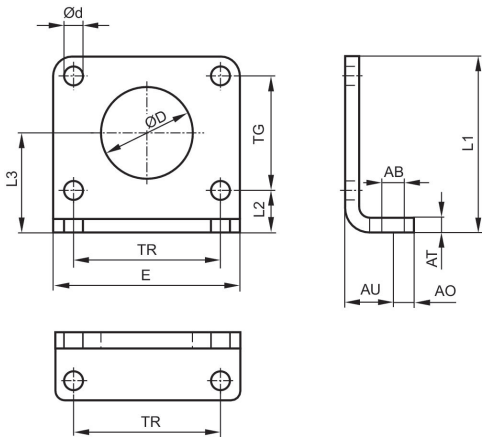

Piston Ø	Part No.	Ø AB	AO	AT	AU ±0,2	Ø d	E	L1	L2
32	5217000504	9	10	5	20	7	72	56	18
40	5217010504	9	10	5	20	9	80	58	18
50	5217020504	11	10	6	25	9	90	75	25
63	5217030504	11	10	6	25	9	96	85	25

Piston Ø	L3	Ø D	TG ±0,2	TR
32	32	30	28	52
40	33	38	30	60
50	45	45	40	70
63	50	45	50	76