# Foot mounting MS1, Series CM1

**5217010504**

**AVENTICS Foot mountings**



## Technical data

| | |
|---|---|
| Industry | Industrial |
| Version | Version: standard/compact/short type |
| For series | RPC |
| Piston diameter | 40 mm |

## Material

| | |
|---|---|
| Material | Steel, chrome-plated |
| Surface | galvanized |
| Part No. | 5217010504 |

# Foot mounting MS1, Series CM1

5217010504

2024-08-29

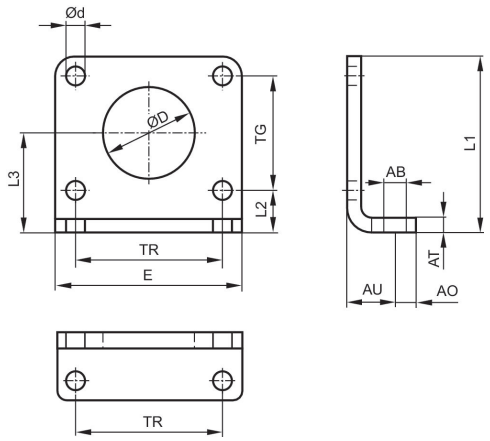


| Piston Ø | Part No. | Ø AB | AO | AT | AU ±0,2 | Ø d | E | L1 | L2 |
|---|---|---|---|---|---|---|---|---|---|
| 32 | 5217000504 | 9 | 10 | 5 | 20 | 7 | 72 | 56 | 18 |
| 40 | 5217010504 | 9 | 10 | 5 | 20 | 9 | 80 | 58 | 18 |
| 50 | 5217020504 | 11 | 10 | 6 | 25 | 9 | 90 | 75 | 25 |
| 63 | 5217030504 | 11 | 10 | 6 | 25 | 9 | 96 | 85 | 25 |

| Piston Ø | L3 | Ø D | TG ±0,2 | TR |
|---|---|---|---|---|
| 32 | 32 | 30 | 28 | 52 |
| 40 | 33 | 38 | 30 | 60 |
| 50 | 45 | 45 | 40 | 70 |
| 63 | 50 | 45 | 50 | 76 |