Rear eye MP9

3683206000

AVENTICS Rear eyes



Technical data

Industry	Industrial
Version	With rubber bushing Elongated hole
Standardization	ISO 15552
Piston diameter	63 mm
Weight	0.411 kg

Material

Material	Aluminum
Surface	forged
Bearing material	Bronze
Fig.	Fig. 1
Part No.	3683206000

Rear eye MP9

3683206000

Dimensions

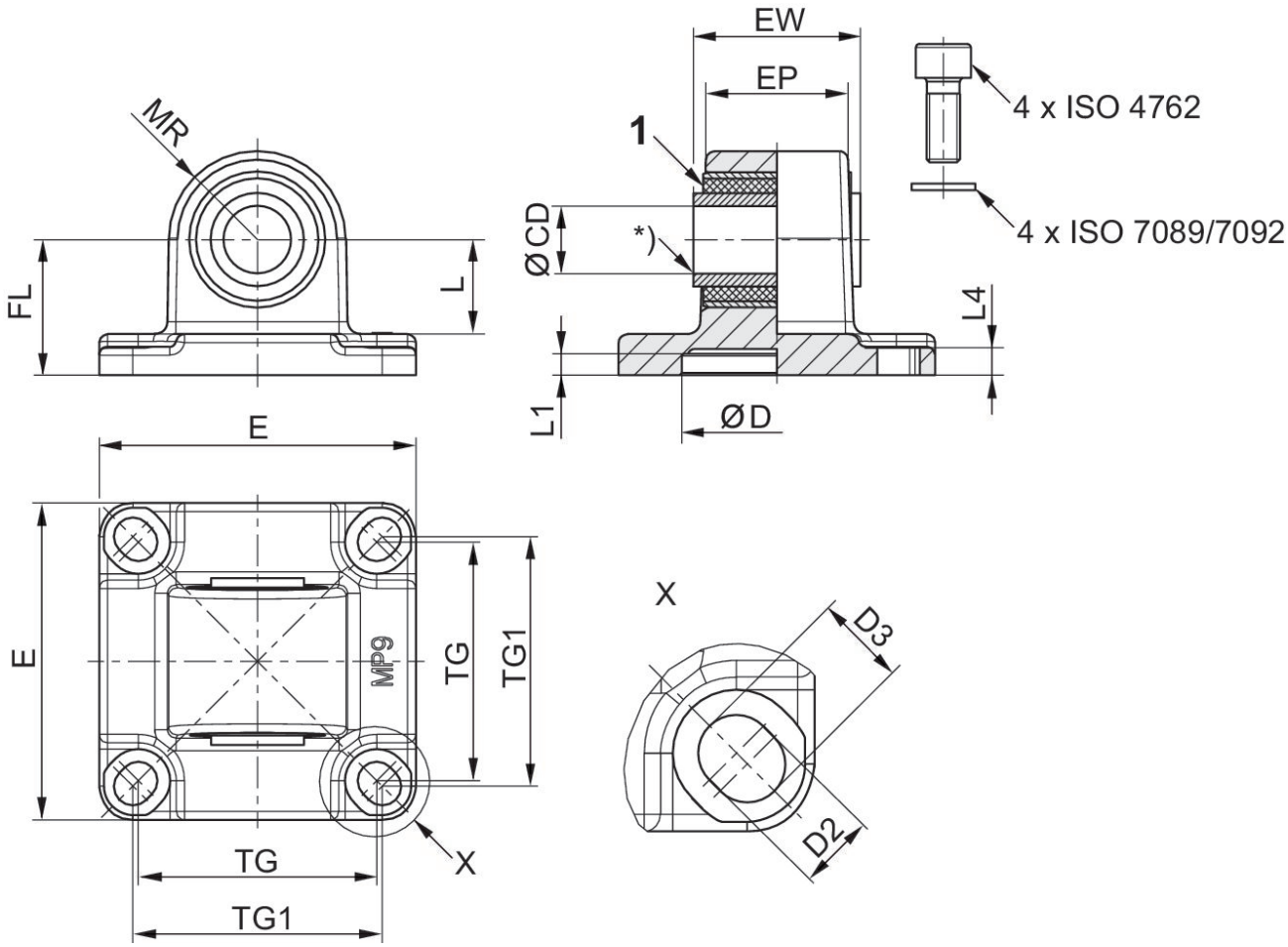

1) Rubber bushing

Piston Ø	Part No.	CD H11	CD H9	E	EW	EP	TG	TG1 ±0,2	FL ±0,2	L 1)
25	3683202000	10	-	40	17.5	14,5	26	27	20	14.8
40	3683204000	-	12	53	27	23,5	38	40	25	16.3
63	**3683206000**	-	16	75	39.5	33.5	56.5	59	32	22.3
100	3683210000	-	20	114	59.5	54	89	90	41	25.8

Piston Ø	MR	L1	L4	D H11	D2 -0,2	D3 -0,2
25	12,5	3	3	18	5,5	6,2
40	15	5	5.5	35	6.6	8
63	21	5	6.5	45	–	–
100	25	5	10	55	11	11.7