Rear eye MP9

3683203000

AVENTICS Rear eyes



Technical data

Industry	Industrial
Version	With rubber bushing
Standardization	ISO 15552
Piston diameter	32 mm
Weight	0.092 kg

Material

Material	Aluminum
Surface	forged
Bearing material	Bronze
Part No.	3683203000

Rear eye MP9

3683203000

Dimensions

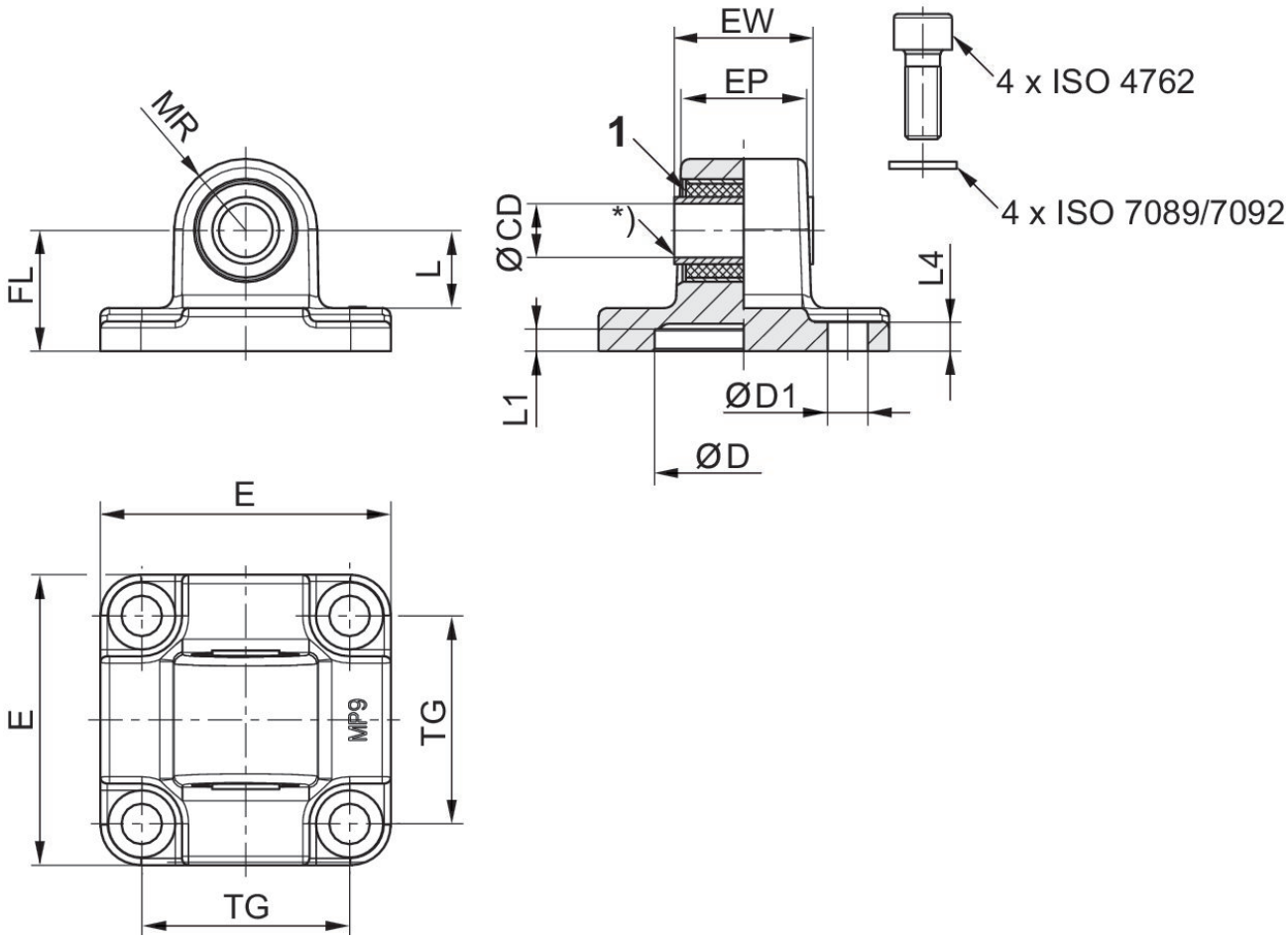

1) Rubber bushing

Piston Ø	Part No.	CD H11	CD H9	E	EW	EP	TG	FL ±0,2	L 1)	MR
32	3683203000	10	-	46	25.5	18,9	32.5	22	13.8	12.5
50	3683205000	-	12	65	31	28	46.5	27	17.3	16
50	3663205000		12	65	31	28	46	27	17.3	18
80	3663208000		16	94.5	49.5	43	73	36	21.8	22
80	3683208000	-	16	94.5	49.5	43	72	36	21.8	22
125	R412015973	-	25	138	69.5	60	110	50	33.8	34

Piston Ø	L1	L4	D H11	D1 H13
32	5	5.5	30	6.6
50	5	6.5	40	9
50	5	6.5	40	6.6
80	5	6.5	45	8.5
80	5	10	45	11
125	7.5	10	60	13.5