Clevis mounting MP2, Series CM1

3682905590

AVENTICS Clevis mountings



Technical data

Industry	Industrial
Version	Corrosion-resistant version Suitable for robust mechanical engineering applications
Standardization	ISO 15552
Piston diameter	50 mm
Scope of delivery	Clevis mounting incl. mounting screws
Weight	0.232 kg

Material

Material	Aluminum
Surface	forged and anodized
Screws material	Stainless Steel
Bearing material	Plastic
Part No.	3682905590

Dimensions

Clevis mounting MP2, Series CM1

3682905590

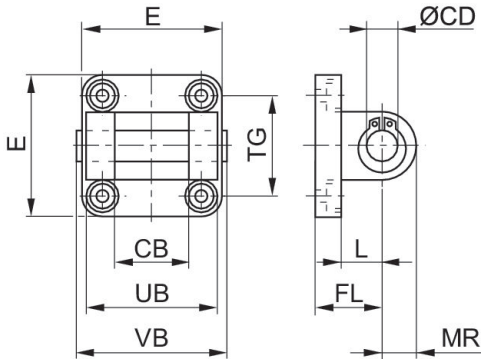

Cylinders Ø	Part No.	CB H14	Ø CD H9	E max.	FL	L min.	MR	UB h14	VB	TG
32	3682903590	26	10	47	22 ±0,2	12	10	45	50	32,5 ±0,2
40	3682904590	28	12	54	25 ±0,2	15	12	52	57	38,0 ±0,2
50	**3682905590**	32	12	65	27 ±0,2	15	12	60	65	46,5 ±0,2
63	3682906590	40	16	75	32 ±0,2	20	15	70	76	56,5 ±0,2
80	3682908590	50	16	94	36 ±0,2	20	17	90	96	72,0 ±0,2
100	3682910590	60	20	112	41 ±0,2	25	21	110	117	89,0 ±0,2
125	R412025571	70	25	138	50	30	26	130	140	110,0 ±0,3