Clevis mounting MP2, Series CM1

3672910000

AVENTICS Clevis mountings



Technical data

Industry	Industrial
Version	for rear eye MP9 with rubber bushing
For series	167 CCL-IC CCL-IS
Piston diameter	100 mm
Scope of delivery	Scope of delivery incl. bolt

Material

Material	Aluminum
Surface	forged and anodized
Screws material	Stainless Steel
Material bolt	Stainless Steel
Part No.	3672910000

Dimensions

Clevis mounting MP2, Series CM1

3672910000

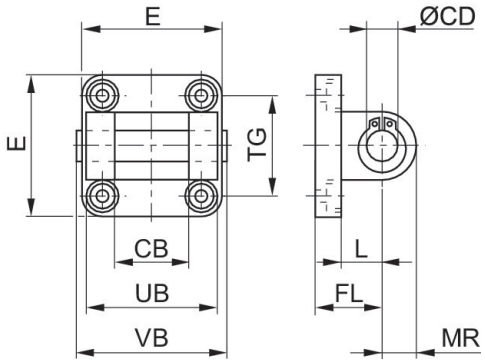

Part No.	Cylinders Ø	CB H14	Ø CD H9	E max.	FL	L min.	MR	UB h14	VB	TG *contains elongated hole
3682902590	25	18	10	40	20	14	9	36	42,5	26/27*
3672903000	32	26	10	47,5	22	12	11	45	64	32
3672904000	40	28	12	53,5	25	15	13	52	71	40*
3672905000	50	32	12	64	27	15	13	60	79	46
3672906000	63	40	16	74	32	18	17	70	93	59*
3672908000	80	50	16	95	36	20	17	90	113	73
3672910000	100	60	20	113,5	41	25	21	110	133	90*