Rod clevis with circlip, Series AP2, Stainless Steel

3330510000

AVENTICS Rod clevises



Technical data

Industry	Industrial
To mount on series	CCL-IC/-IS CCI CSL-RD ICM ICS-D2 SSI 167
Type	With one circlip
Thread size	M4
Weight	0.007 kg

Material

Housing material	Stainless Steel
Part No.	3330510000

Dimensions

Rod clevis with circlip, Series AP2, Stainless Steel

3330510000

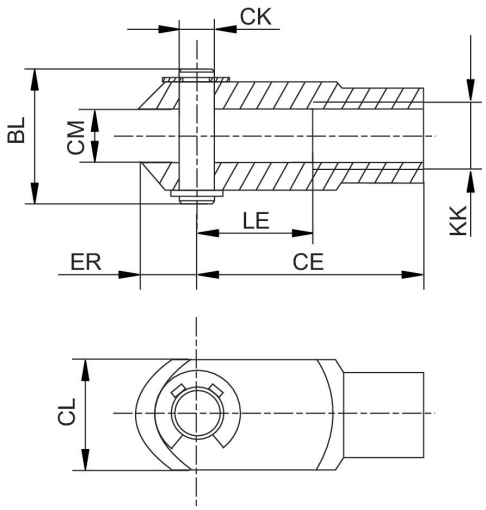

Part No.	CE	ØCK	CL	CM B12	ER	BL	KK	LE
3330510000	16	4 *	8	4	5	11	M4	8
3330516000	24	6 *	12	6	7	17	M6	12
3330520000	32	8 **	16	8	10	24	M8	16
3590502000	40	10 **	20	10	12	27	M10x1,25	20
3590504000	48	12 **	24	12	14	33	M12x1,25	24
3590505000	64	16 **	32	16	19	43	M16x1,5	32
3590508000	80	20 **	40	20	25	53	M20x1,5	40

* ØCK h11
** ØCK e8