Clevis mounting AB3, Series CM1

3323416000

AVENTICS Clevis mountings



Technical data

Industry	Industrial
Version	Elongated hole
Piston diameter	12 mm 16 mm
Scope of delivery	Clevis mounting incl. pivot pins, lock washer

Material

Material	Stainless Steel
Part No.	3323416000

Dimensions

Clevis mounting AB3, Series CM1

3323416000

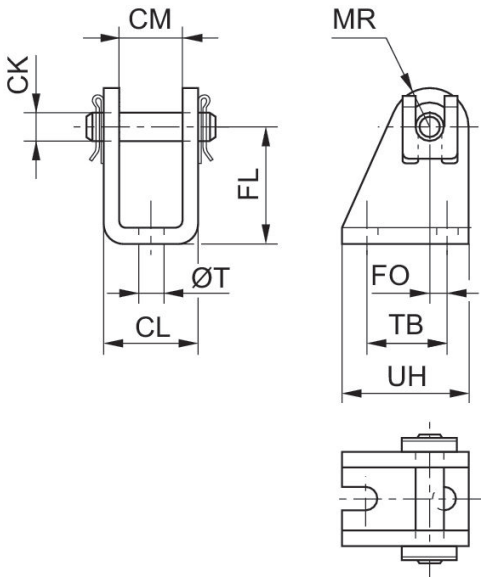

Piston Ø	Part No.	CM	Ø CK	CL	FL	FO	MR	Ø T	TB	UH
20, 25	3323420000	16	8	24	30	4,0	10	6.6	22	32
32	3323432000	26	10	36	32	6,0	12	6.6	24	36