Series G3

AVENTICS™

AVENTICS G3 Electronic Fieldbus Platform

EMERSON™

AVENTICS G3 Electronic Fieldbus Platform

In today's highly automated machines, the AVENTICS Series G3 electronic fieldbus valve system is replacing conventional hardwired solutions. It integrates communication interfaces to pneumatic valve valve system with input/output (I/O) capabilities. This next-generation electronic platform permits easy access to connections; it's simple to assemble, install, commission, and maintain. The G3's functionality allows programmable logic controllers to more efficiently turn valves on and off, and to channel I/O data from sensors, lights, relays, individual valves, or other I/O devices via various industrial networks. The G3 is the only pneumatic valve manifold that contains a graphical display used for configuration, commissioning, and diagnostics. It offers improvements in application, performance, and maintenance for original equipment manufacturers (OEMs) and end users alike.

- Innovative graphic display enables easy commissioning, visual status, and diagnostics
- Highly flexible, distributable architecture scales up with your system's requirements
- Auto recovery module (ARM) protects configuration data during critical failure while the Wireless ARM allows access to vital valve system diagnostics and health monitoring via WiFi connection
- Power connector allows output power to be removed while inputs and communications are left active
- Networks with DeviceNet, Ethernet IP, Profibus, Profinet, and Powerlink fieldbus protocols

Product overview

Page

I/O modules
Digital inputs NAMUR, Series G3 5
Socket (female), M12
Digital inputs NAMUR, Series G3 7
Socket (female), M12
IO-Link Master, class A (8 ports), Series G3 9
I/O modules, Series G3 11
Socket (female), M8x1
I/O modules, Series G3 13
Screw terminal block - Screw terminal block
I/O modules, Series G3 15
Plug
I/O modules, Series G3 16
digital inputs PNP - Socket
I/O modules, Series G3 18
Socket
I/O modules, Series G3 20
Socket
I/O modules, Series G3 22
Socket

Fieldbus connection
Bus coupler, Series G3 24
Fieldbus connection with I/O functionality power supply 7/8″ 4-pin - DeviceNet - Plug
Series G3 26
Fieldbus connection with I/O functionality power supply 7/8″ 4-pin - MODBUS TCP
Series G3 28
Fieldbus connection with I/O functionality power supply 7/8″ 5-pin - PROFIBUS DP
Series G3 30
Fieldbus connection with I/O functionality power supply 7/8″ 5-pin - Profinet
Series G3 32
Fieldbus connection with I/O functionality power supply 7/8″ 5-pin - POWERLINK
Series G3 34
Fieldbus connection with I/O functionality power supply 7/8″ 4-pin - CANopen
Series G3 36
Fieldbus connection with I/O functionality power supply 7/8″ 4-pin - EtherNet/IP
Series G3 38
Fieldbus connection with I/O functionality power supply 7/8″ 4-pin - EtherCAT
Series G3 40
Fieldbus connection with I/O functionality power supply 7/8″ 4-pin - EtherCAT - Plug

Accessories G3
G3 Subbus module 42
Power plug 7/8", 4-pin - Plug
End plate left 44
Left end plate for Subbus G3 46
Right end plate for Subbus G3 48
Right end plate for G3 Standalone 50
Wireless auto-recovery module, series G3 52
Wireless auto-recovery module, series G3

Product overview

Page
Y-Plug connector, series CON-AP..... 54
Socket - M12x1 - 5-pin - straight - Plug - M12x1 - 5-pin - straight - Plug - M12x1 - 4-pin
Connection piece..... 55

Digital inputs NAMUR, Series G3

Certificates: ATEX
Min. ambient temperature: -20 °C
Max. ambient temperature: 50 °C

Number of poles	Number of inputs	I/O module version	E/A capable	Number of I/O connections	Part No.
4-pin	8	digital inputs NAMUR	connection with I/O	8 inputs	240-320

Dimensions

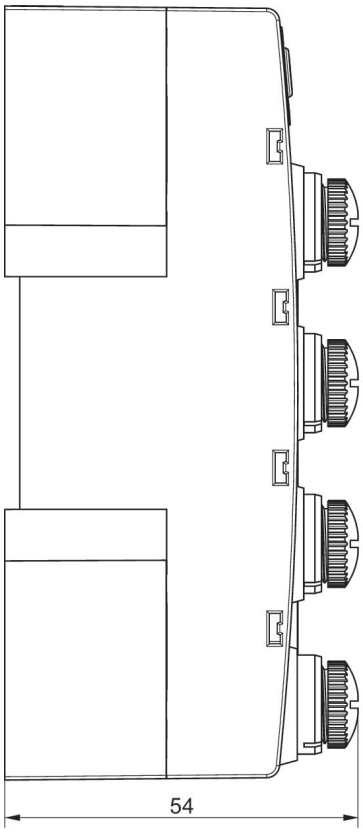
54

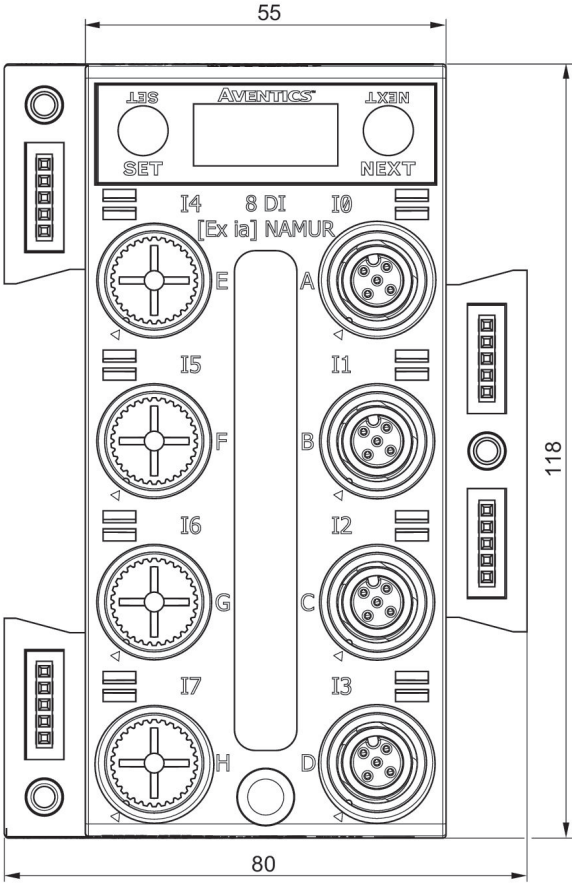
55
SET
AVENTICS
NEXT
SET
NEXT
I4
8 DI
I0
[Ex ia] NAMUR
E
A
I5
I1
F
B
I6
I2
G
C
I7
I3
H
D
118
80

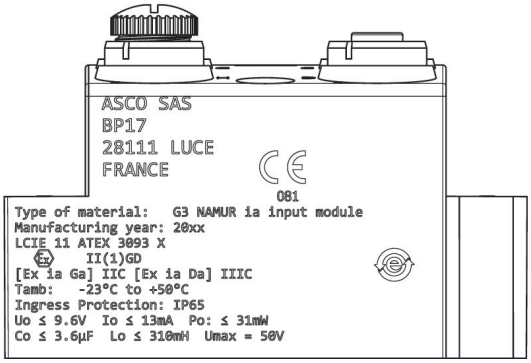
ASCO SAS
BP17
28111 LUCE
FRANCE
CE
081
Type of material: G3 NAMUR ia input module
Manufacturing year: 20xx
LCIE 11 ATEX 3093 X
Ex II(1)GD
[Ex ia Ga] IIC [Ex ia Da] IIIC
Tamb: -23°C to +50°C
Ingress Protection: IP65
Uo ≤ 9.6V Io ≤ 13mA Po: ≤ 31mW
Co ≤ 3.6µF Lo ≤ 310mH Umax = 50V

Digital inputs NAMUR, Series G3

Certificates: ATEX
Min. ambient temperature: -20 °C
Max. ambient temperature: 50 °C

Number of inputs	I/O module version	E/A capable	Number of I/O connections	Operational voltage electronics	Part No.
8	digital inputs NAMUR	connection with I/O	8 inputs	24 V DC	240-322

Dimensions

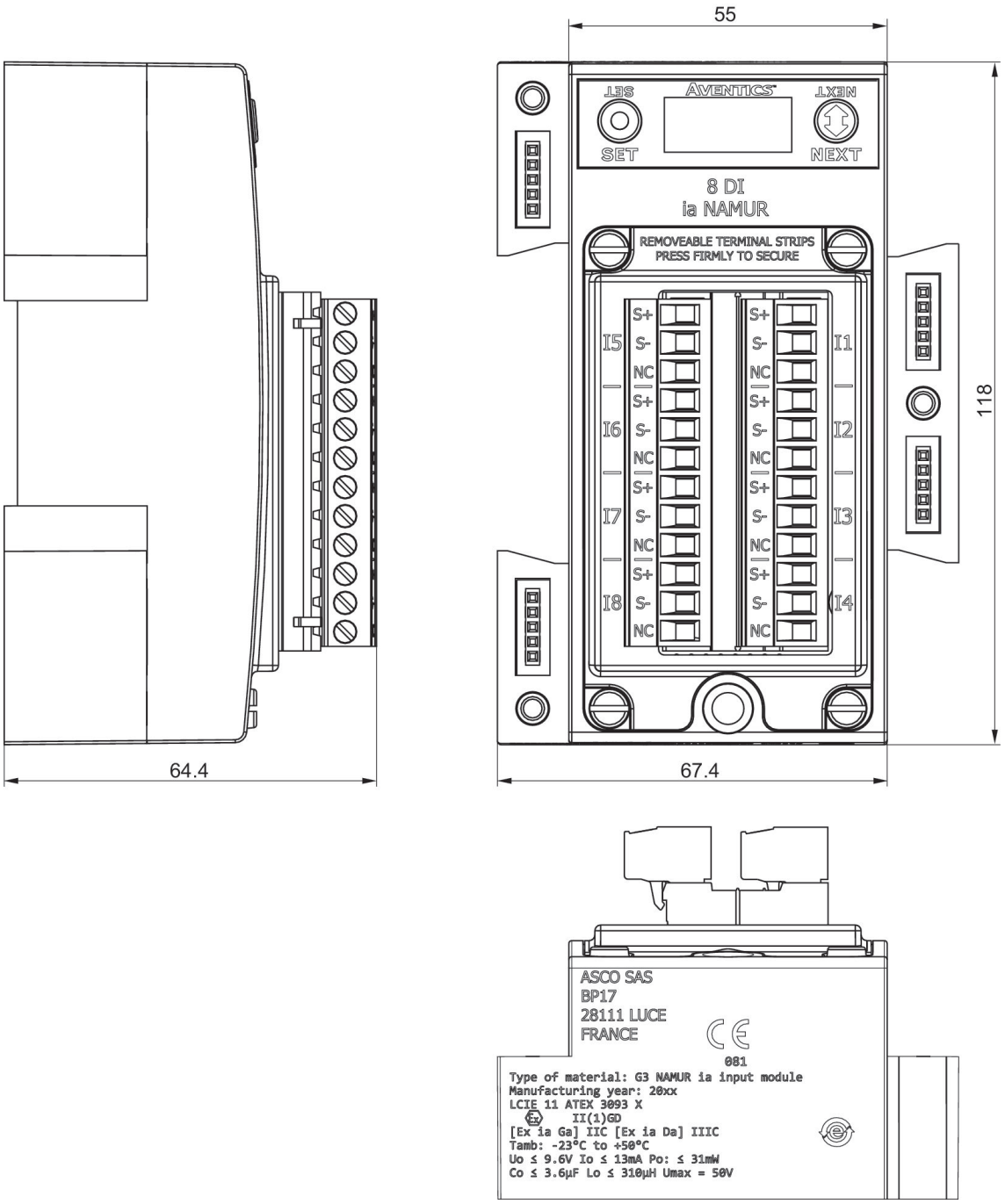
55
SET
AVENTICS
NEXT
8 DI
ia NAMUR
REMOVEABLE TERMINAL STRIPS
PRESS FIRMLY TO SECURE
I5
I6
I7
I8
I1
I2
I3
I4
S+
S-
NC
118
64.4
67.4
ASCO SAS
BP17
28111 LUCE
FRANCE
CE
081
Type of material: G3 NAMUR ia input module
Manufacturing year: 20xx
LCIE 11 ATEX 3093 X
Ex II(1)GD
[Ex ia Ga] IIC [Ex ia Da] IIIC
Tamb: -23°C to +50°C
Uo ≤ 9.6V Io ≤ 13mA Po: ≤ 31mW
Co ≤ 3.6µF Lo ≤ 310µH Umax = 50V

IO-Link Master, class A (8 ports), Series G3

Electrical connection 2, thread size: M12
Electrical connection 2, number of poles: 5-pin
Min. ambient temperature: -10 °C
Max. ambient temperature: 50 °C

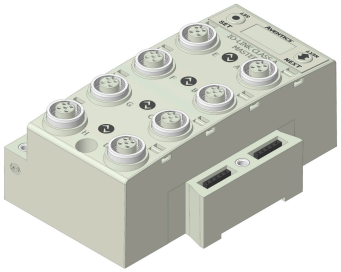

Number of poles	Number of inputs	Number of outputs	I/O module version	E/A capable	Number of I/O connections	Operational voltage electronics	Operational voltage electronics	Part No.
5-pin	8	8	IO-Link Master, class A (8 ports)	connection without I/O	8 inputs / 8 outputs	24 V DC	-10 % / +10 %	240-381

Total current of sensors	Part No.
4 A	240-381

Dimensions

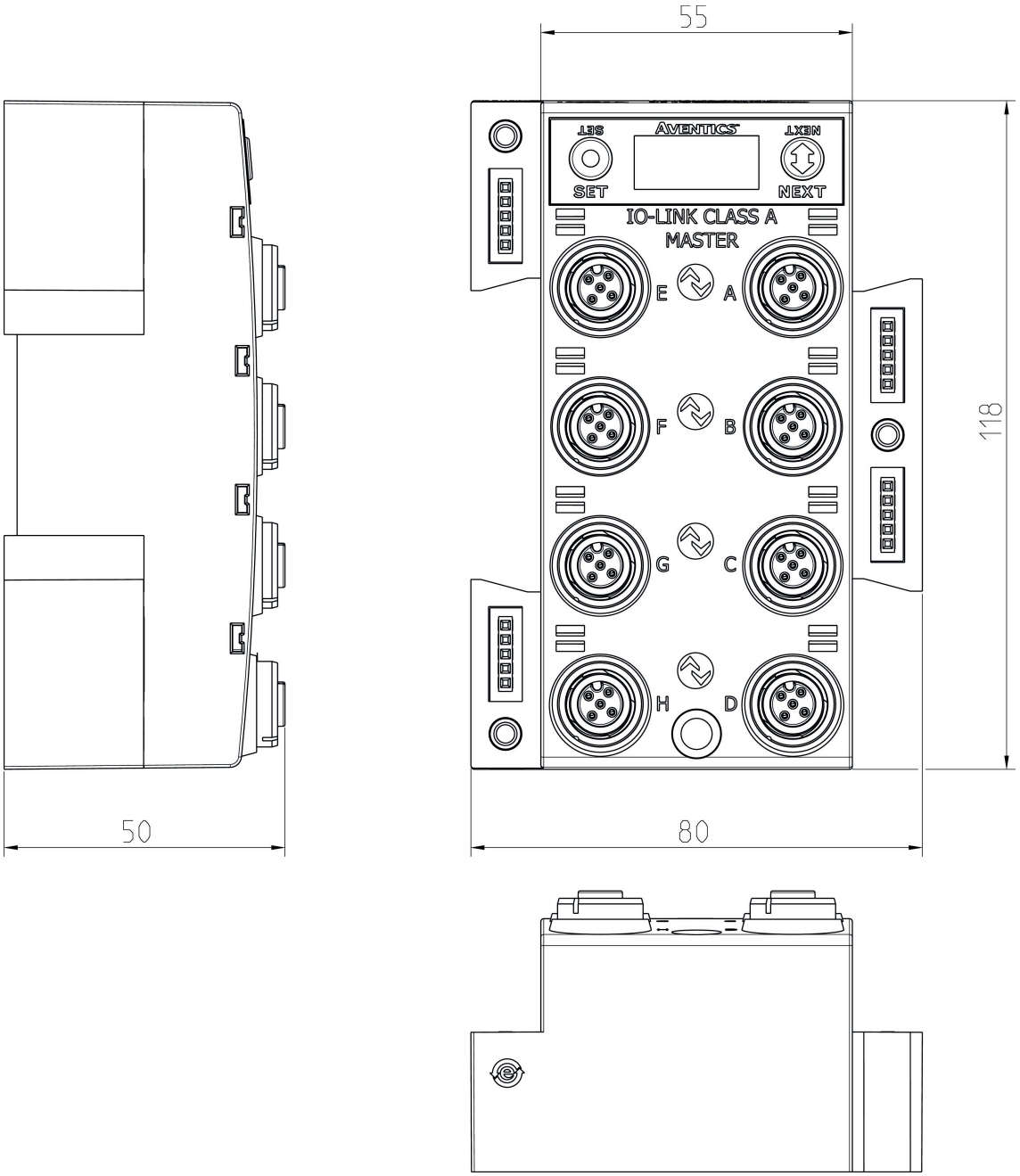

240-381

Pin assignments

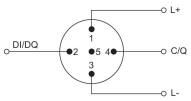

I/O modules, Series G3

Min. ambient temperature: -10 °C
Max. ambient temperature: 50 °C

Number of inputs	E/A capable	Number of I/O connections	Total current of sensors	Part No.
8	connection with I/O	8 inputs	1,2 A	240-326

Dimensions

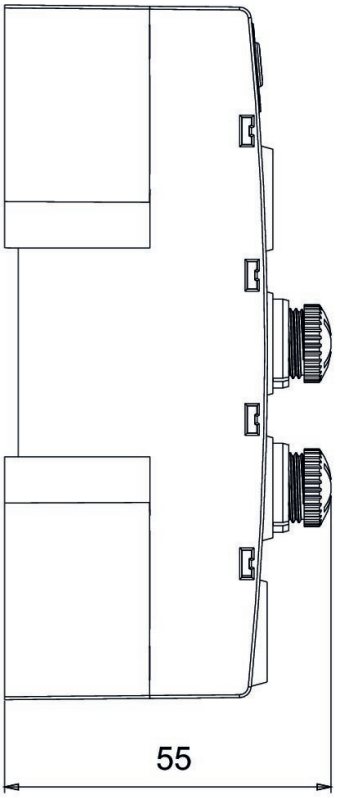
55

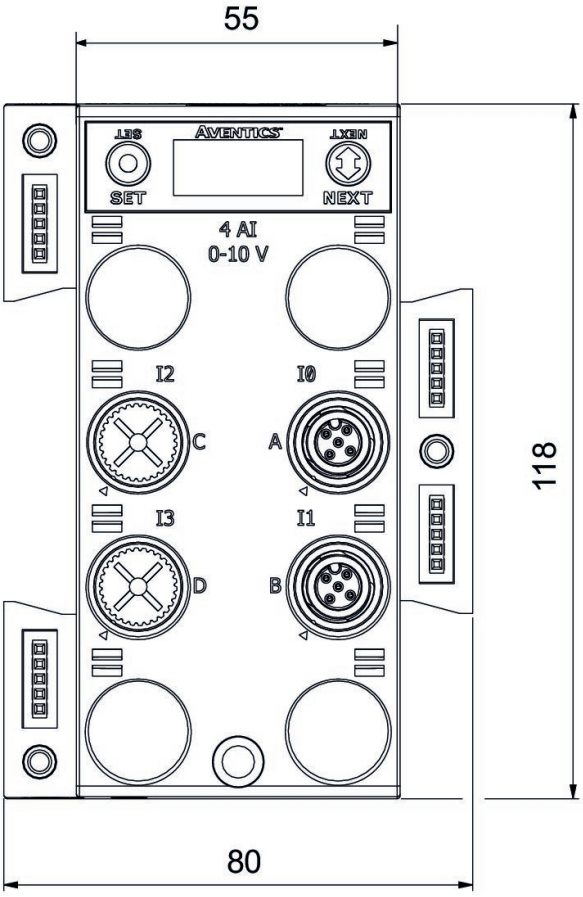
55
AVENTICS
SET
NEXT
4 AI
0-10 V
I2
I0
C
A
I3
I1
D
B
118
80

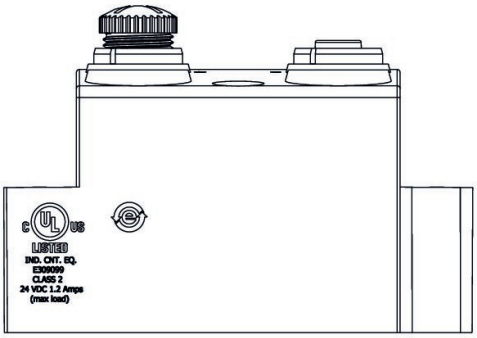
LISTED
IND. CNT. EQ.
E309099
CLASS 2
24 VDC 1.2 Amps
(max load)

I/O modules, Series G3

Min. ambient temperature: -10 °C
Max. ambient temperature: 50 °C

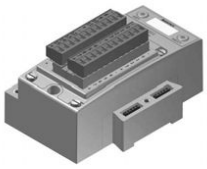

Number of inputs	Number of outputs	I/O module version	Operational voltage electronics	Operational voltage electronics	Total current of sensors	Part No.
16		digital inputs PNP	24 V DC	-10 % / +10 %	1,2 A	240-203
16		digital inputs NPN	24 V DC	-10 % / +10 %	1,2 A	240-204
8		digital inputs PNP	24 V DC	-10 % / +10 %	1,2 A	240-316
	16	digital inputs NPN	24 V DC	-10 % / +10 %	1,2 A	240-330

Dimensions

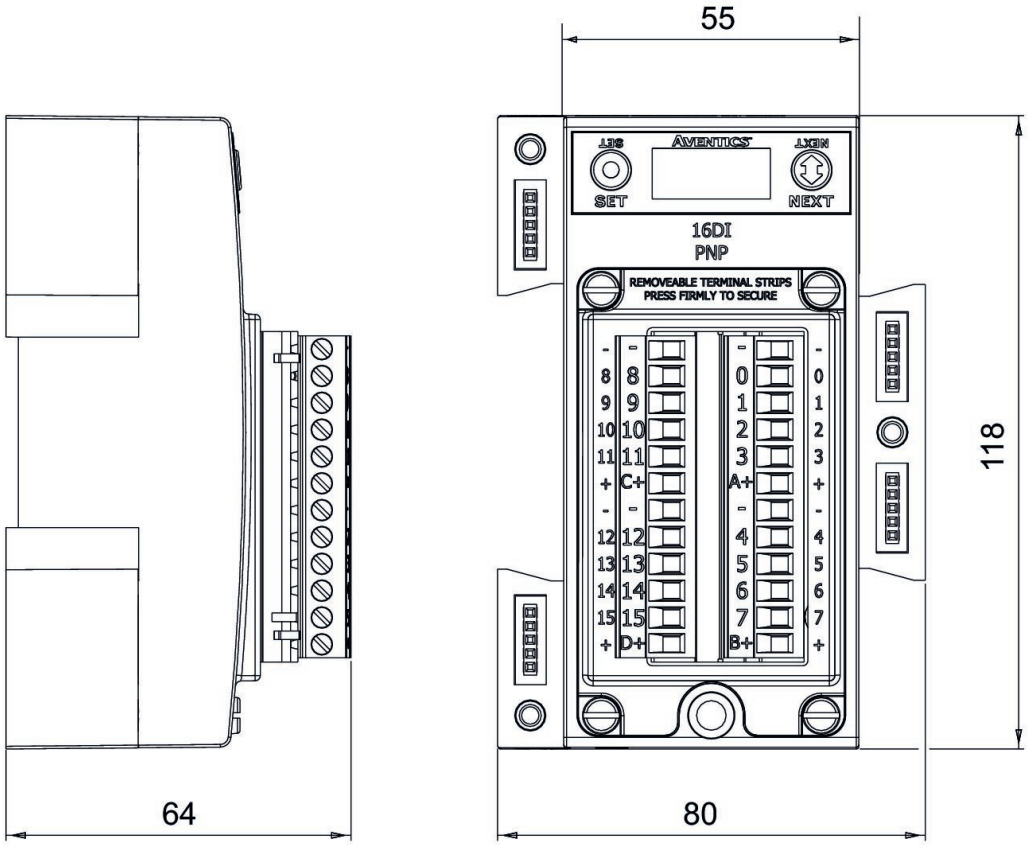
55
118
64
80
AVENTICS
SET
NEXT
16DI
PNP
REMOVEABLE TERMINAL STRIPS
PRESS FIRMLY TO SECURE

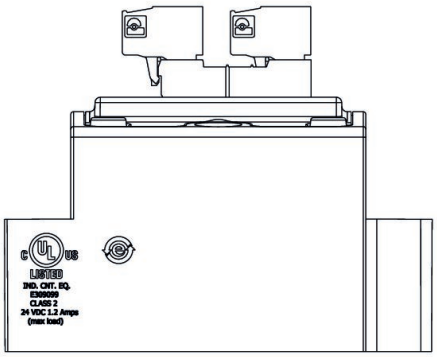

I/O modules, Series G3

Electrical connection 2, thread size: M23x1
Electrical connection 2, number of poles: 19-pin
Min. ambient temperature: -10 °C
Max. ambient temperature: 50 °C

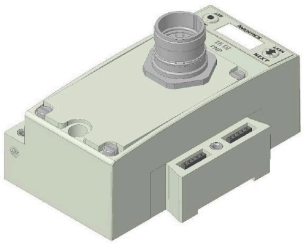

Number of poles	Number of inputs	I/O module version	Total current of sensors	Part No.
19-pin	16	digital inputs PNP	1,2 A	240-323

I/O modules, Series G3

Electrical connection 2, thread size: M8x1
Min. ambient temperature: -10 °C
Max. ambient temperature: 50 °C

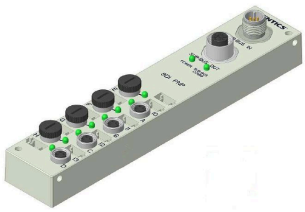

Number of inputs	I/O module version	Operational voltage electronics	Operational voltage electronics	Total current of sensors	Part No.
8	digital inputs PNP	24 V DC	-10 % / +10 %	1,2 A	240-379

Dimensions

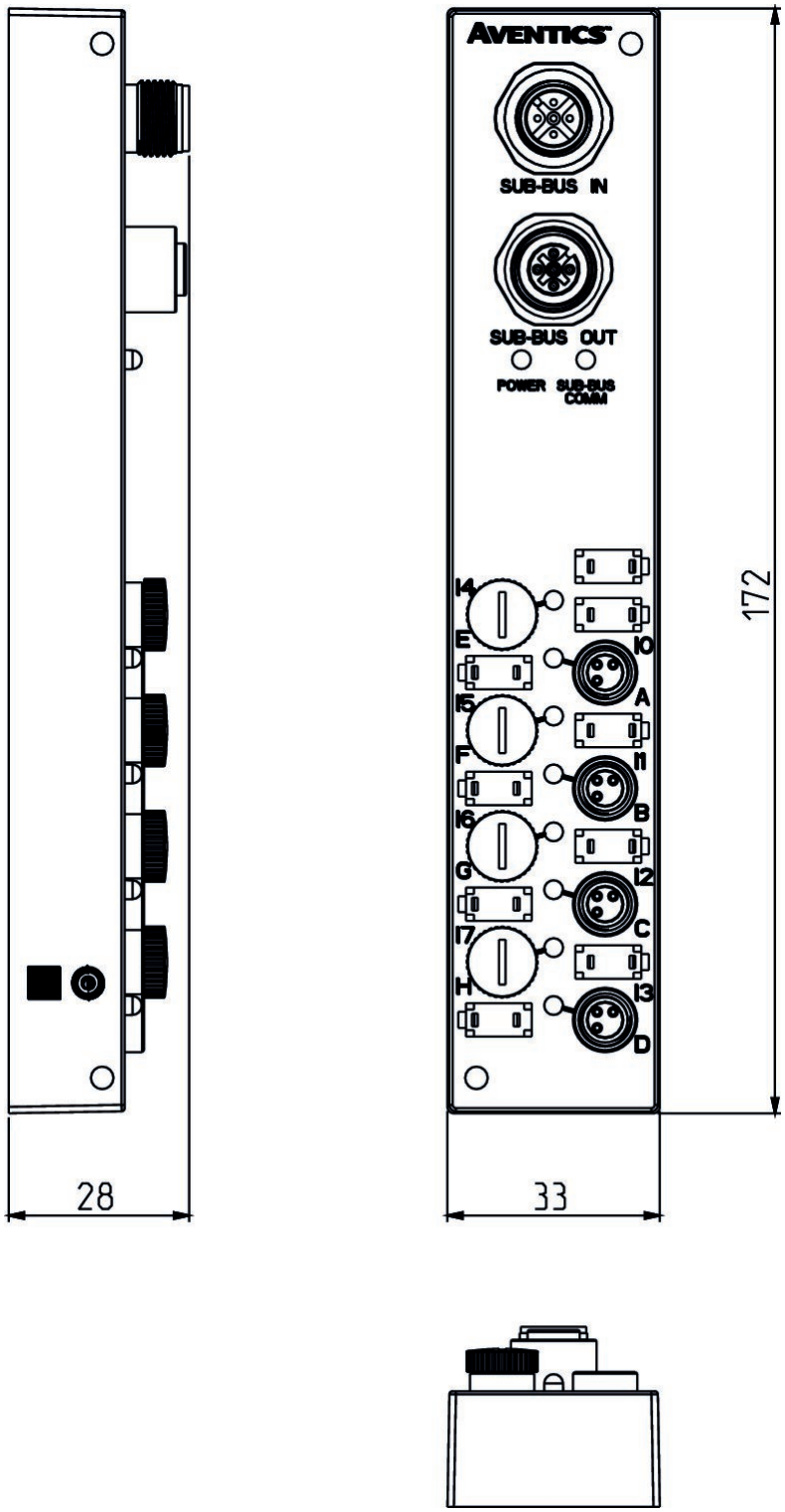
AVENTICS
SUB-BUS IN
SUB-BUS OUT
POWER
SUB-BUS COMM
I4
E
I5
F
I6
G
I7
H
I0
A
I1
B
I2
C
I3
D
172
28
33

I/O modules, Series G3

Electrical connection 2, thread size: M12x1
Min. ambient temperature: -10 °C
Max. ambient temperature: 50 °C

Type	Number of inputs	Number of outputs	I/O module version	Operational voltage electronics	Operational voltage electronics	Total current of sensors	Part No.
16DI8M12, digital inputs PNP	16		digital inputs PNP	24 V DC	-10 % / +10 %	1,2 A	240-205
8DI8M8, digital inputs PNP	8		digital inputs PNP	24 V DC	-10 % / +10 %	1,2 A	240-206
16DO8M12, digital outputs PNP		16	Digital outputs	24 V DC	-10 % / +10 %	1,2 A	240-207
8DO8M12, digital outputs PNP		8	digital outputs PNP	24 V DC	-10 % / +10 %	1,2 A	240-208
16DI8M12, digital inputs NPN	16		digital inputs NPN	24 V DC	-10 % / +10 %	1,2 A	240-209
8DI8M12, digital inputs NPN	8		digital inputs NPN	24 V DC	-10 % / +10 %	1,2 A	240-210
8DO8M12, digital inputs/outputs PNP	8	8	digital inputs/outputs PNP	24 V DC	-10 % / +10 %	1,2 A	240-211
8DO8M12		8	Digital outputs	24 V DC	-10 % / +10 %	1,2 A	240-300

Dimensions

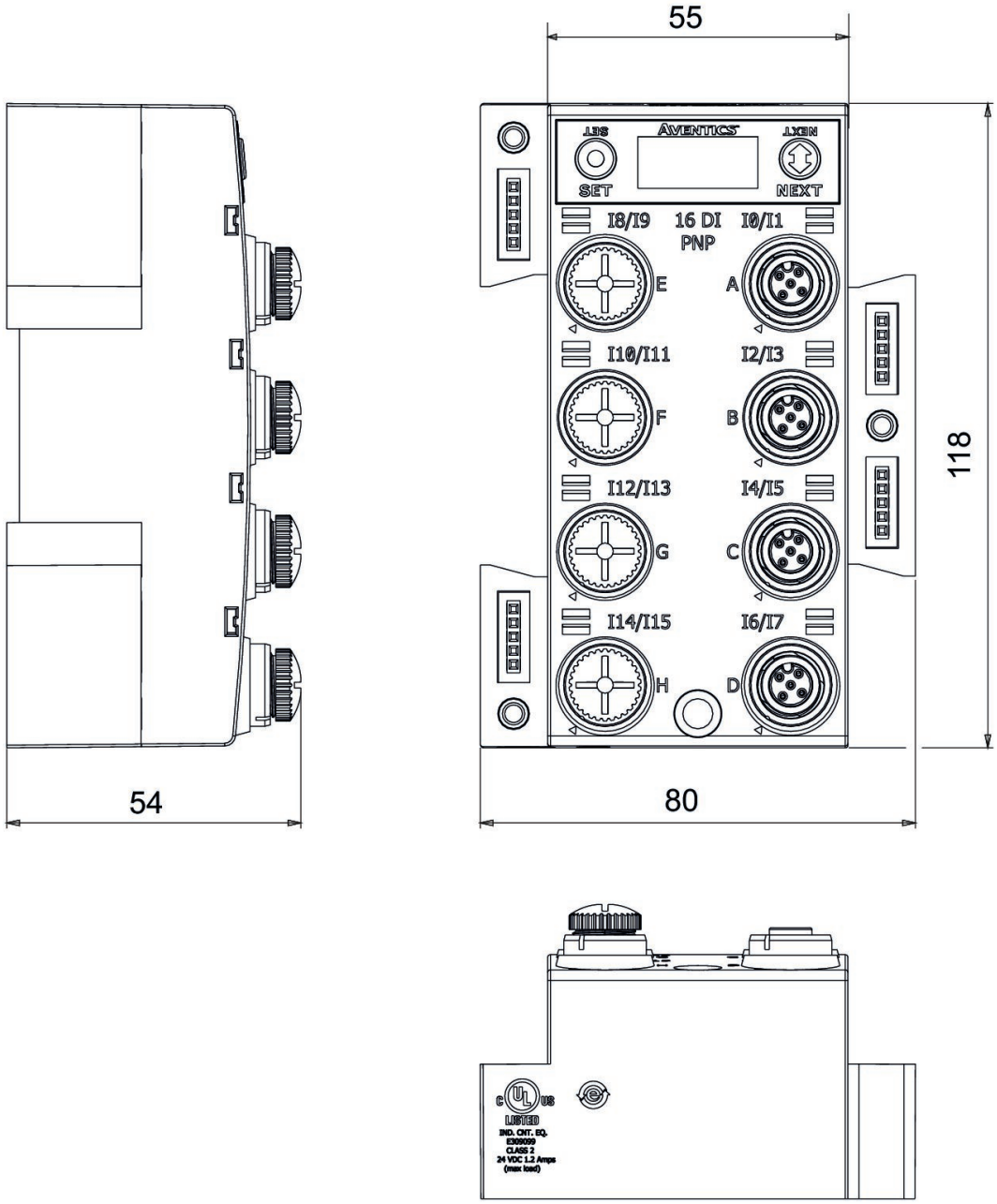
55
118
54
80
AVENTICS
SET
NEXT
I8/I9
16 DI
PNP
I0/I1
E
A
I10/I11
I2/I3
F
B
I12/I13
I4/I5
G
C
I14/I15
I6/I7
H
D
LISTED
IND. CNT. EQ.
E302059
CLASS 2
24 VDC 1.2 Amps
(max load)

I/O modules, Series G3

Electrical connection 2, thread size: M12x1

Type	Number of inputs	Number of outputs	I/O module version	Input signal	Operational voltage electronics	Operational voltage electronics	Total current of sensors	Part No.
4AI4M12-E	4		Analog inputs	0 ... 10 V	24 V DC	-10 % / +10 %	1,2 A	240-212
2AIAO8M12	2	2	analog inputs/outputs	0 ... 10 V	24 V DC	-10 % / +10 %	1,2 A	240-213
4AI4M12-E	4		Analog inputs	4 ... 20 mA	24 V DC	-10 % / +10 %	1,2 A	240-214
2AIAO4M12	2	2	analog inputs/outputs	4 ... 20 mA	24 V DC	-10 % / +10 %	1,2 A	240-215
2AIAO8M12	2	2	analog inputs/outputs	0 ... 10 V	24 V DC	-10 % / +10 %	4 A	240-307
	4	4	analog inputs/outputs		24 V DC	-10 % / +10 %	8 A	240-363

Dimensions

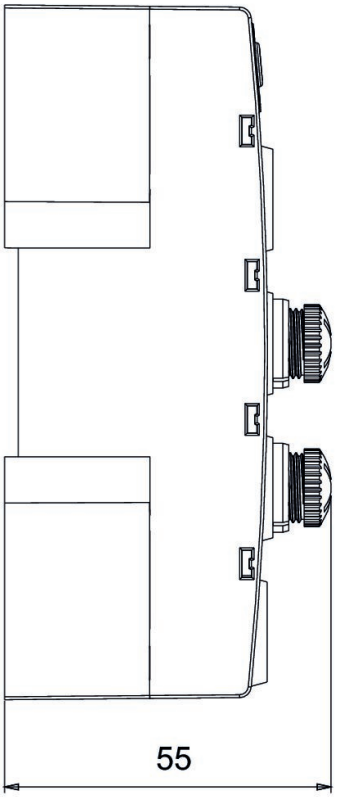
55

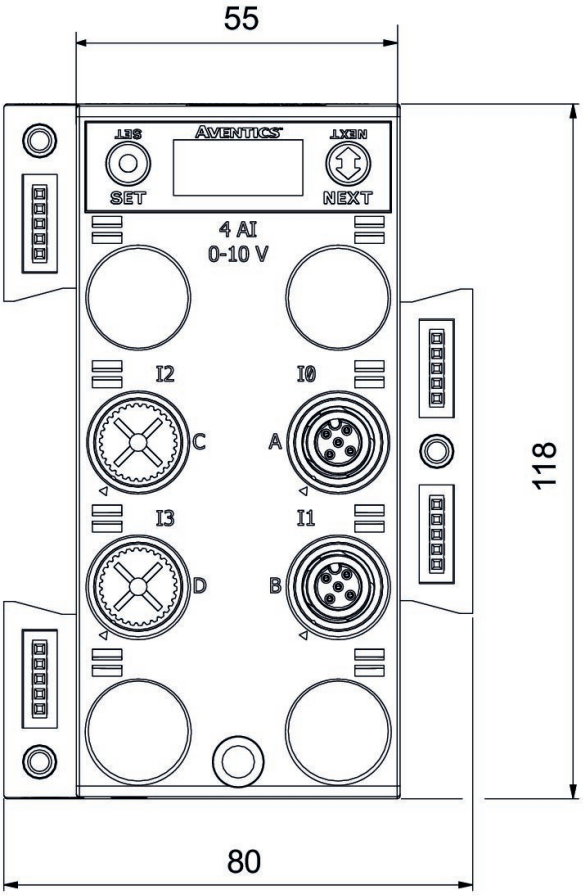
55
AVENTICS
SET
NEXT
4 AI
0-10 V
I2
I0
C
A
I3
I1
D
B
118
80

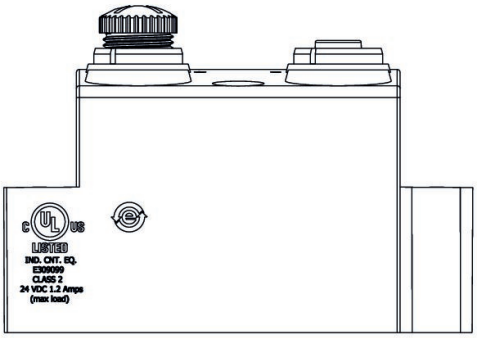
LISTED
IND. CNT. EQ.
E309099
CLASS 2
24 VDC 1.2 Amps
(max load)

I/O modules, Series G3

Electrical connection 2, thread size: M12x1

I/O module version	Operational voltage electronics	Operational voltage electronics	Total current of sensors	Part No.
Analog inputs	24 V DC	-10 % / +10 %	1,2 A	240-311

Dimensions

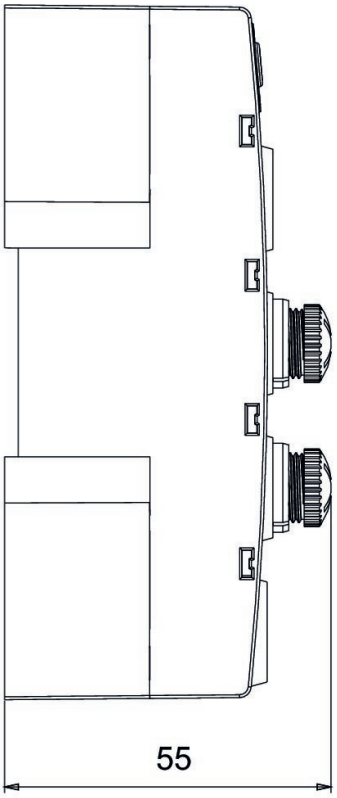
55

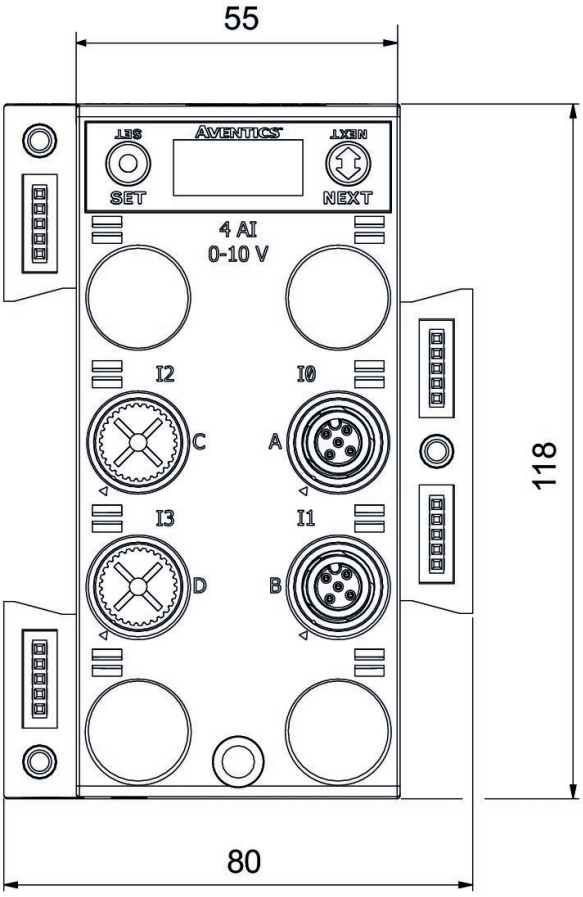
55
AVENTICS
SET
NEXT
4 AI
0-10 V
I2
I0
C
A
I3
I1
D
B
118
80

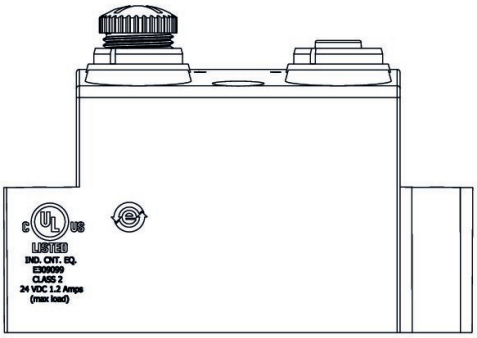
LISTED
IND. CNT. EQ.
E309099
CLASS 2
24 VDC 1.2 Amps
(max load)

Bus coupler, Series G3

Electrical connection 2, thread size: 7/8″
Electrical connection 2, number of poles: 4-pin
Min. ambient temperature: -10 °C
Max. ambient temperature: 50 °C

Fieldbus protocol	Number of poles	Operational voltage electronics	Operational voltage electronics	Part No.
DeviceNet	4-pin	24 V DC	-10 % / +10 %	240-180

Dimensions

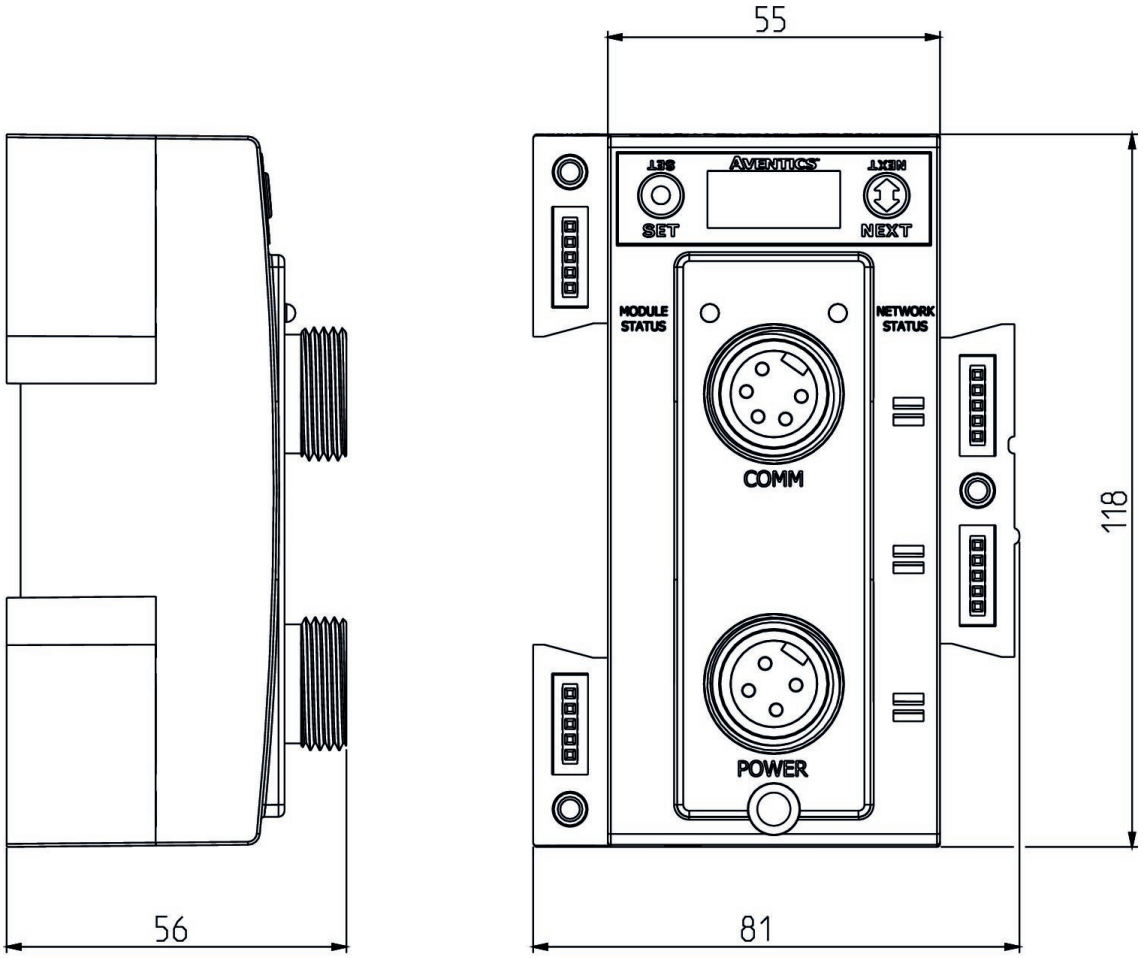
55
SET
AVENTICS
NEXT
MODULE STATUS
NETWORK STATUS
COMM
POWER
118
56
81

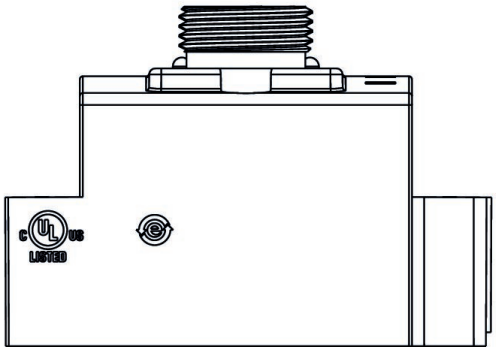
LISTED

Series G3

Min. ambient temperature: -10 °C
Max. ambient temperature: 50 °C

Fieldbus protocol	Number of poles	Operational voltage electronics	Operational voltage electronics	Part No.
MODBUS TCP	4-pin	24 V DC	-10 % / +10 %	240-292

Dimensions

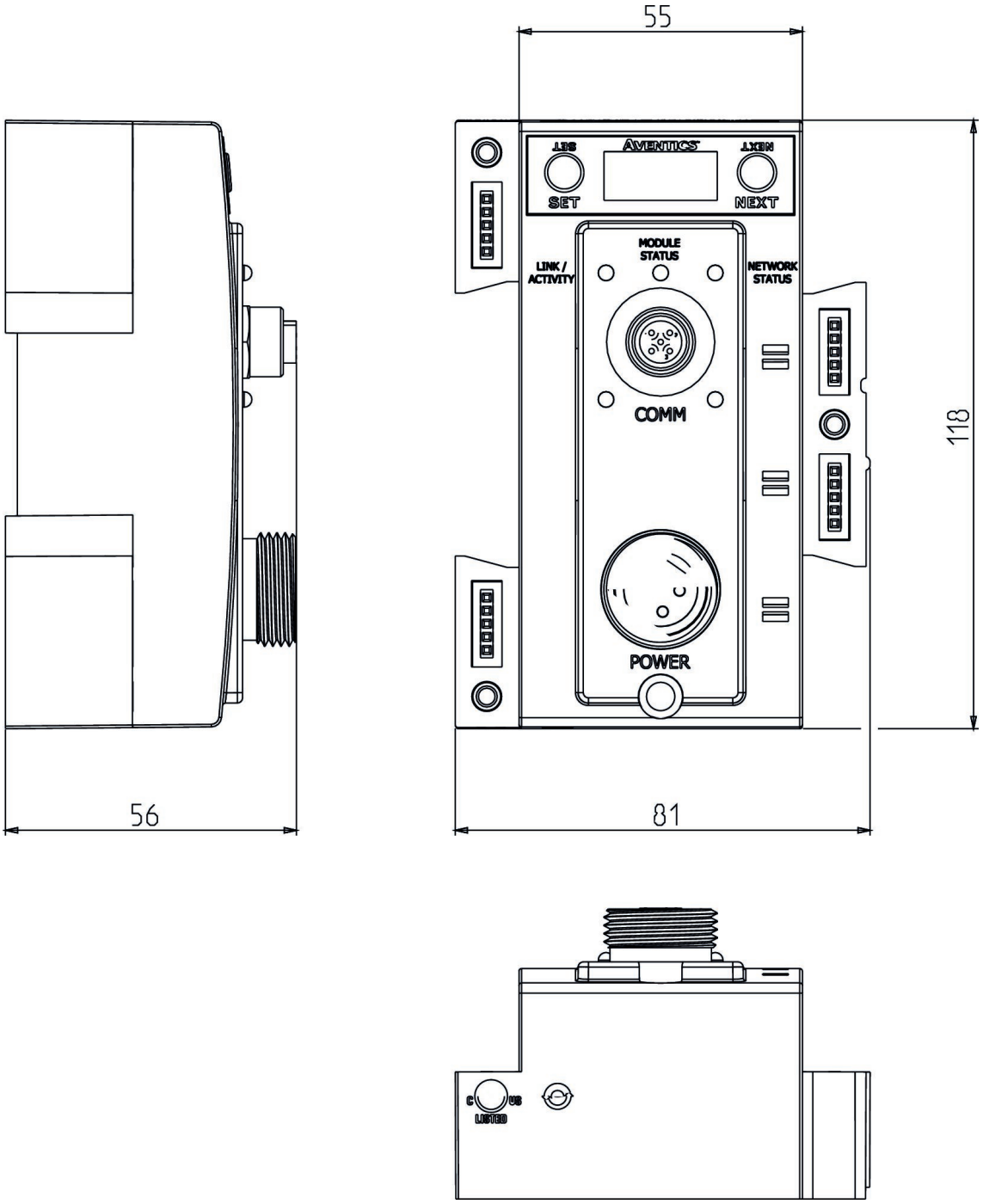
55
SET
AVENTICS
NEXT
MODULE STATUS
LINK / ACTIVITY
NETWORK STATUS
COMM
POWER
118
56
81
LISTED

Series G3

Min. ambient temperature: -10 °C
Max. ambient temperature: 50 °C

Fieldbus protocol	Number of poles	Operational voltage electronics	Operational voltage electronics	Part No.
PROFIBUS DP	5-pin	24 V DC	-10 % / +10 %	240-239

Dimensions

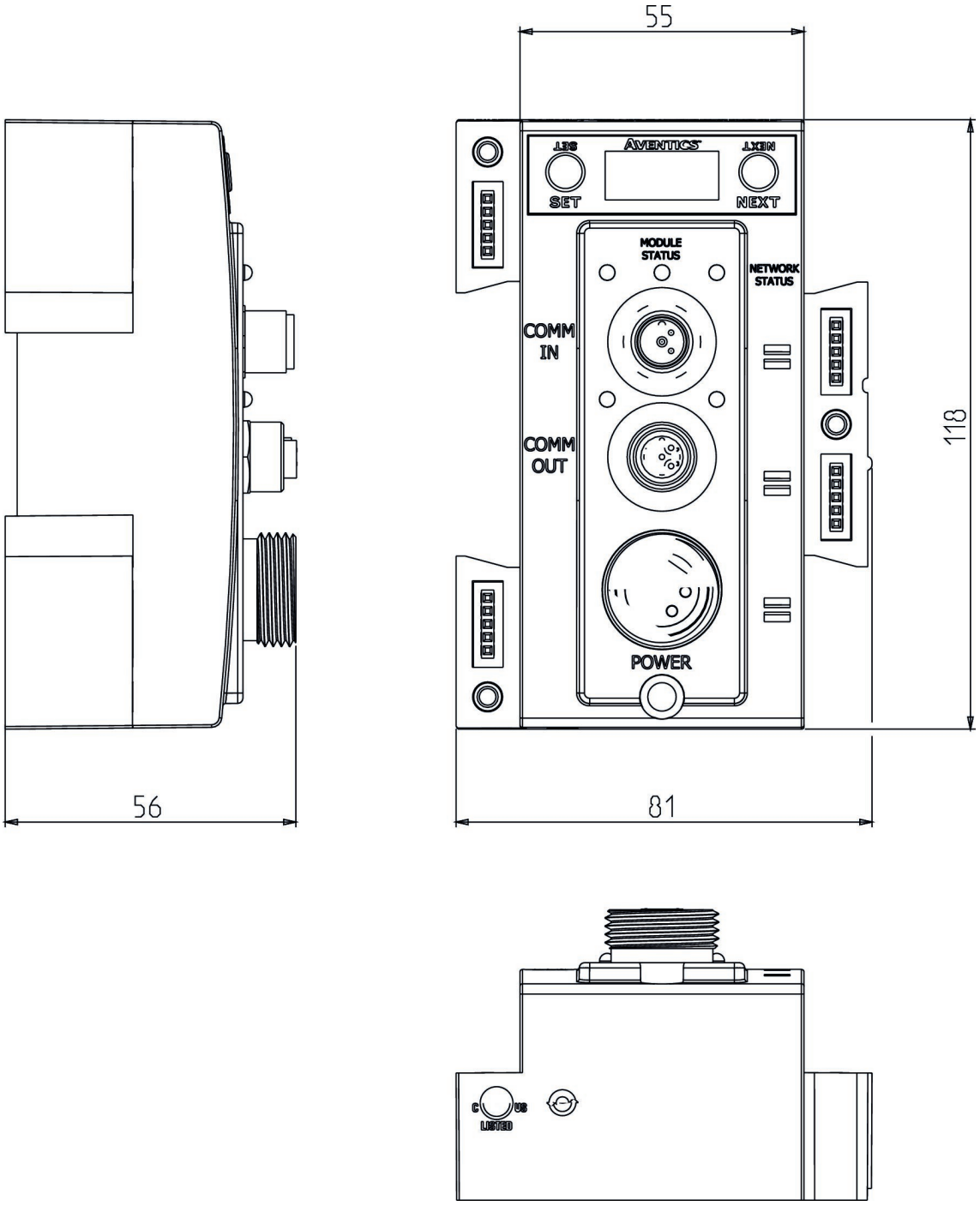
55
SET
AVENTICS
NEXT
MODULE STATUS
NETWORK STATUS
COMM IN
COMM OUT
POWER
118
56
81
c
us
LISTED

Series G3

Min. ambient temperature: -10 °C
Max. ambient temperature: 50 °C

Fieldbus protocol	Number of poles	Operational voltage electronics	Operational voltage electronics	Part No.
Profinet	5-pin	24 V DC	-10 % / +10 %	240-240

Dimensions

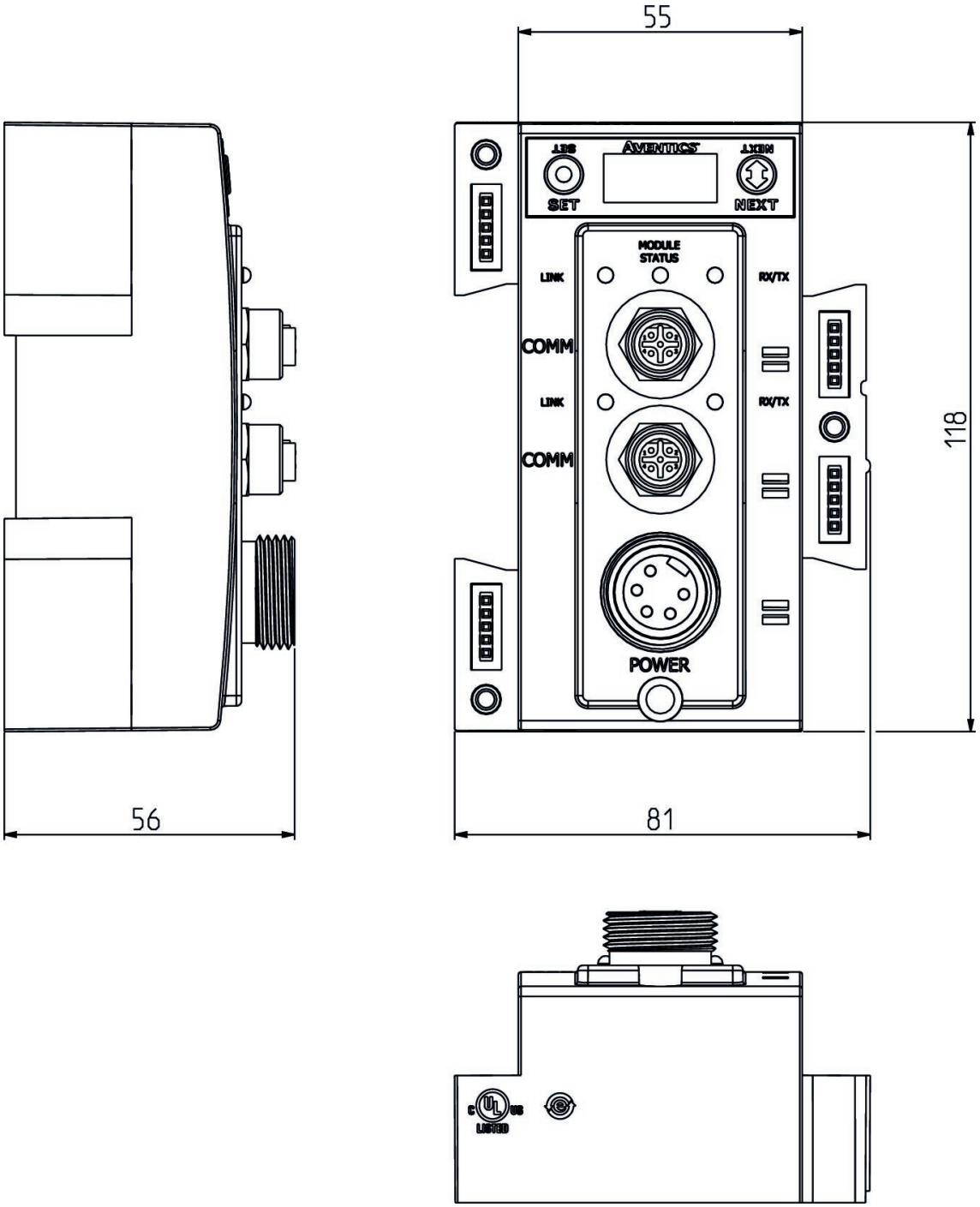
55
SET
NEXT
MODULE STATUS
LINK
RX/TX
COMM
LINK
RX/TX
COMM
POWER
118
56
81

Series G3

Min. ambient temperature: -10 °C
Max. ambient temperature: 50 °C

Fieldbus protocol	Number of poles	Operational voltage electronics	Operational voltage electronics	Part No.
POWERLINK	5-pin	24 V DC	-10 % / +10 %	240-309

Dimensions

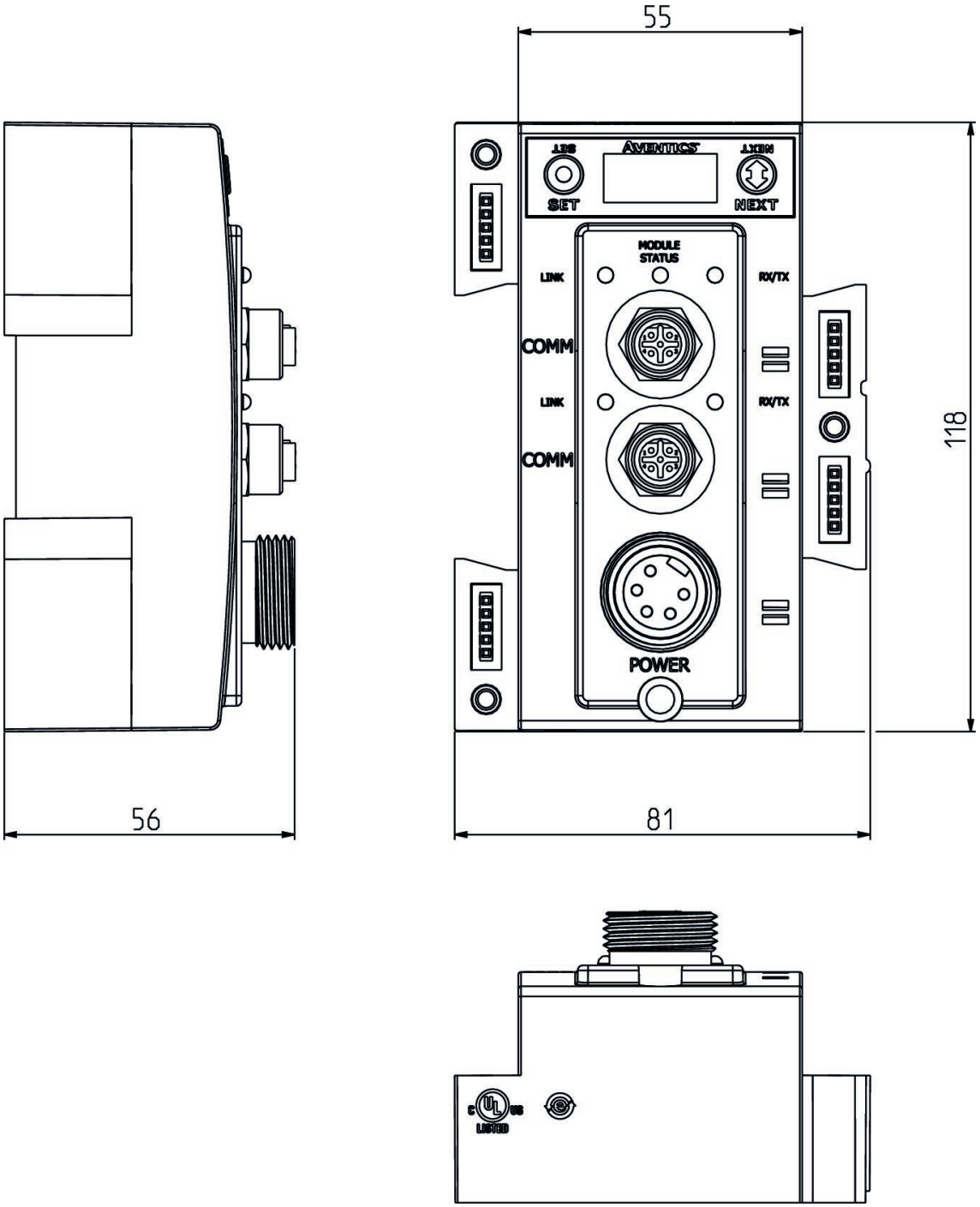
55
SET
NEXT
MODULE STATUS
LINK
RX/TX
COMM
LINK
RX/TX
COMM
POWER
118
56
81

Series G3

Min. ambient temperature: -10 °C
Max. ambient temperature: 50 °C

Fieldbus protocol	Number of poles	Operational voltage electronics	Operational voltage electronics	Part No.
CANopen	4-pin	24 V DC	-10 % / +10 %	240-291

Dimensions

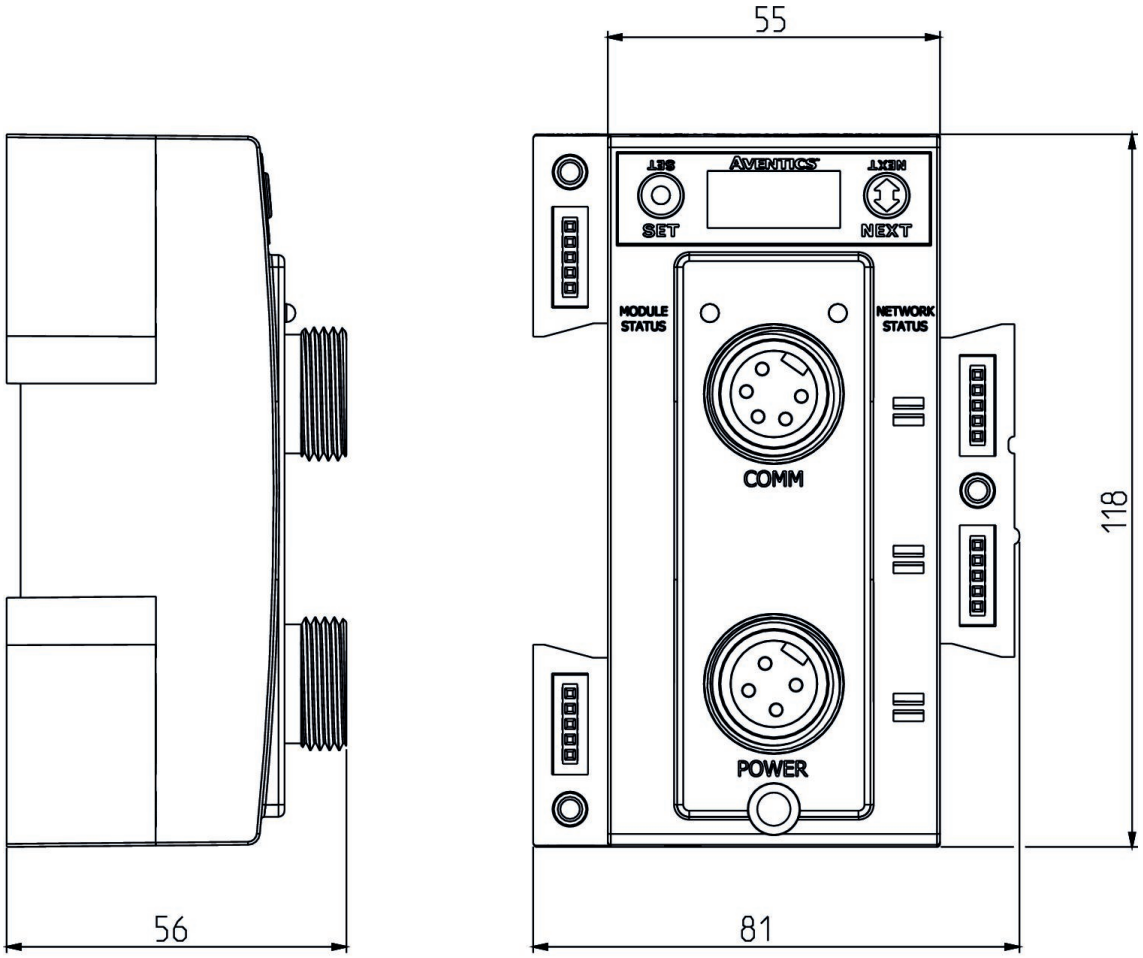
55
SET
AVENTICS
NEXT
MODULE STATUS
NETWORK STATUS
COMM
POWER
118
56
81

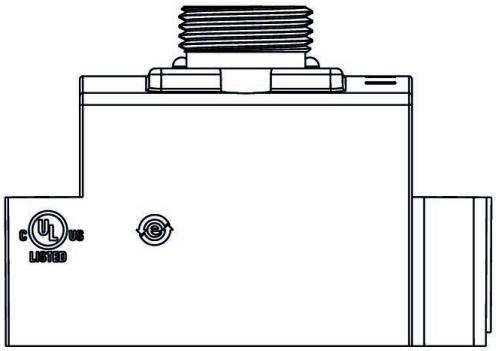
LISTED

Series G3

Min. ambient temperature: -10 °C
Max. ambient temperature: 50 °C

Fieldbus protocol	Number of poles	Operational voltage electronics	Operational voltage electronics	Part No.
EtherNet/IP	4-pin	24 V DC	-10 % / +10 %	240-325

Dimensions

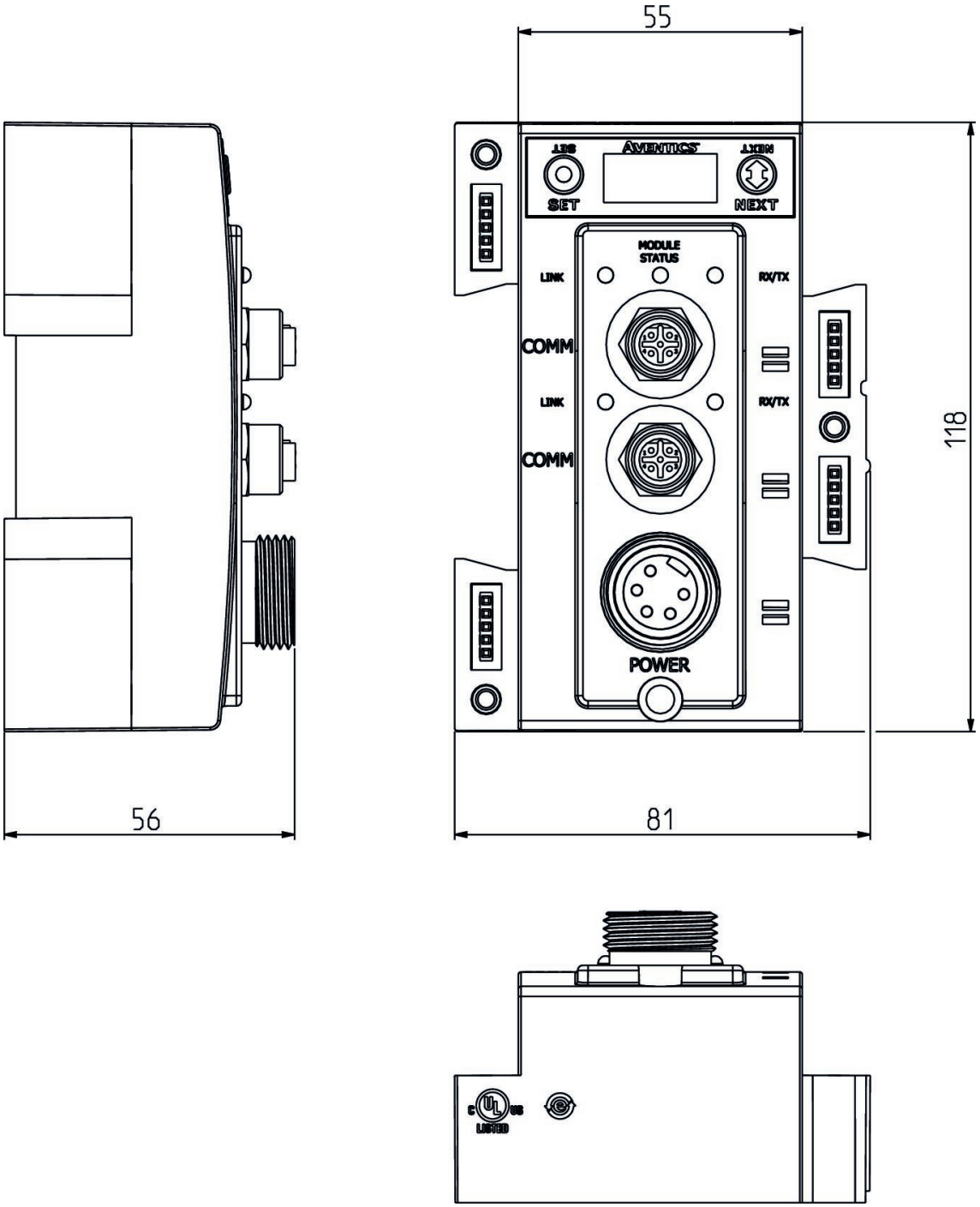
55
SET
NEXT
MODULE STATUS
LINK
RX/TX
COMM
LINK
RX/TX
COMM
POWER
118
56
81

Series G3

Min. ambient temperature: -10 °C
Max. ambient temperature: 50 °C

Fieldbus protocol	Number of poles	Operational voltage electronics	Operational voltage electronics	Part No.
EtherCAT	5-pin	24 V DC	-10 % / +10 %	240-310

Dimensions

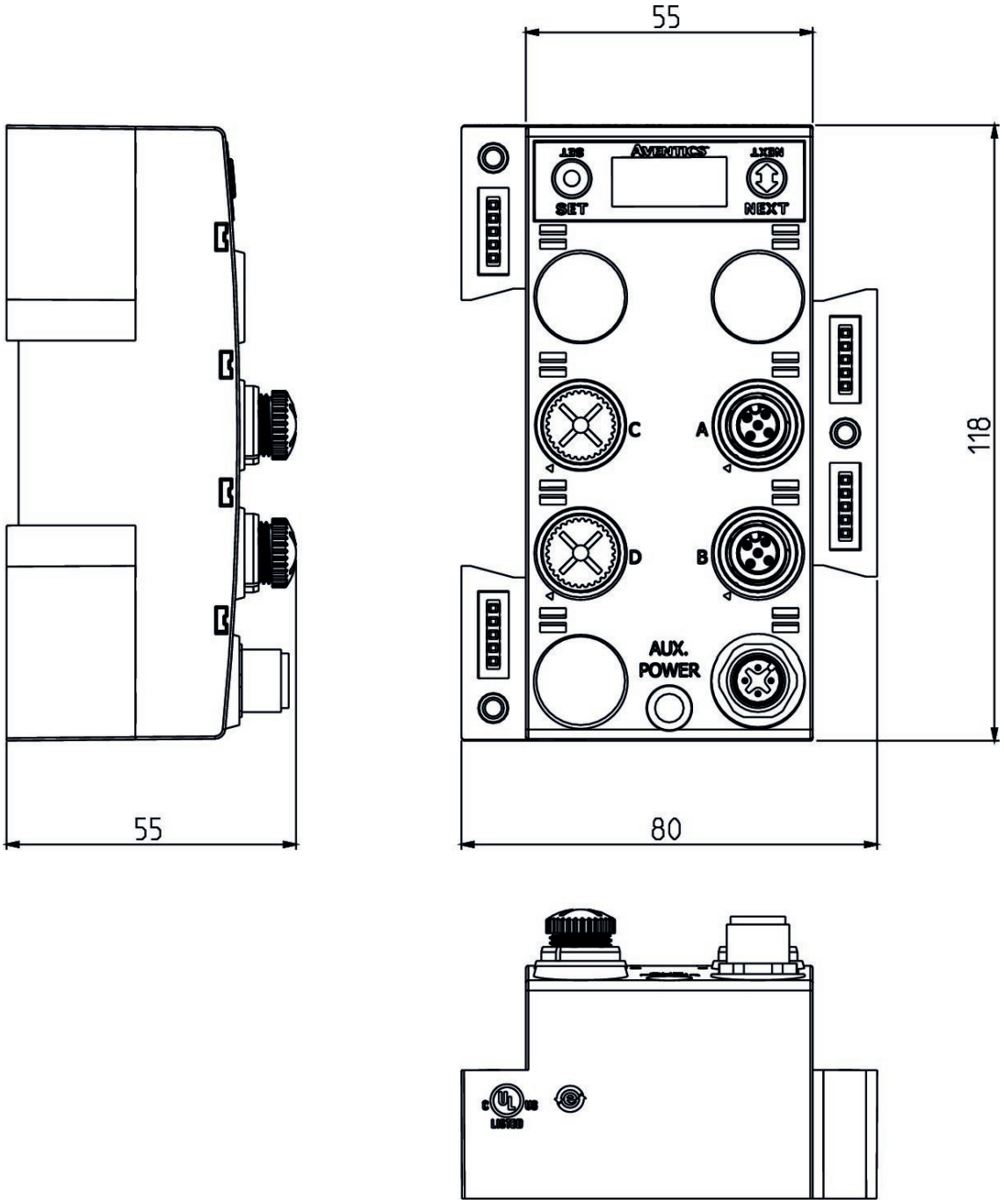

Series G3

Electrical connection 2, thread size: 7/8″
Electrical connection 2, number of poles: 4-pin
Min. ambient temperature: -10 °C
Max. ambient temperature: 50 °C

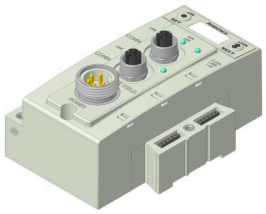

Fieldbus protocol	Number of poles	Operational voltage electronics	Operational voltage electronics	Part No.
EtherCAT	4-pin	24 V DC	-10 % / +10 %	240-362

Dimensions

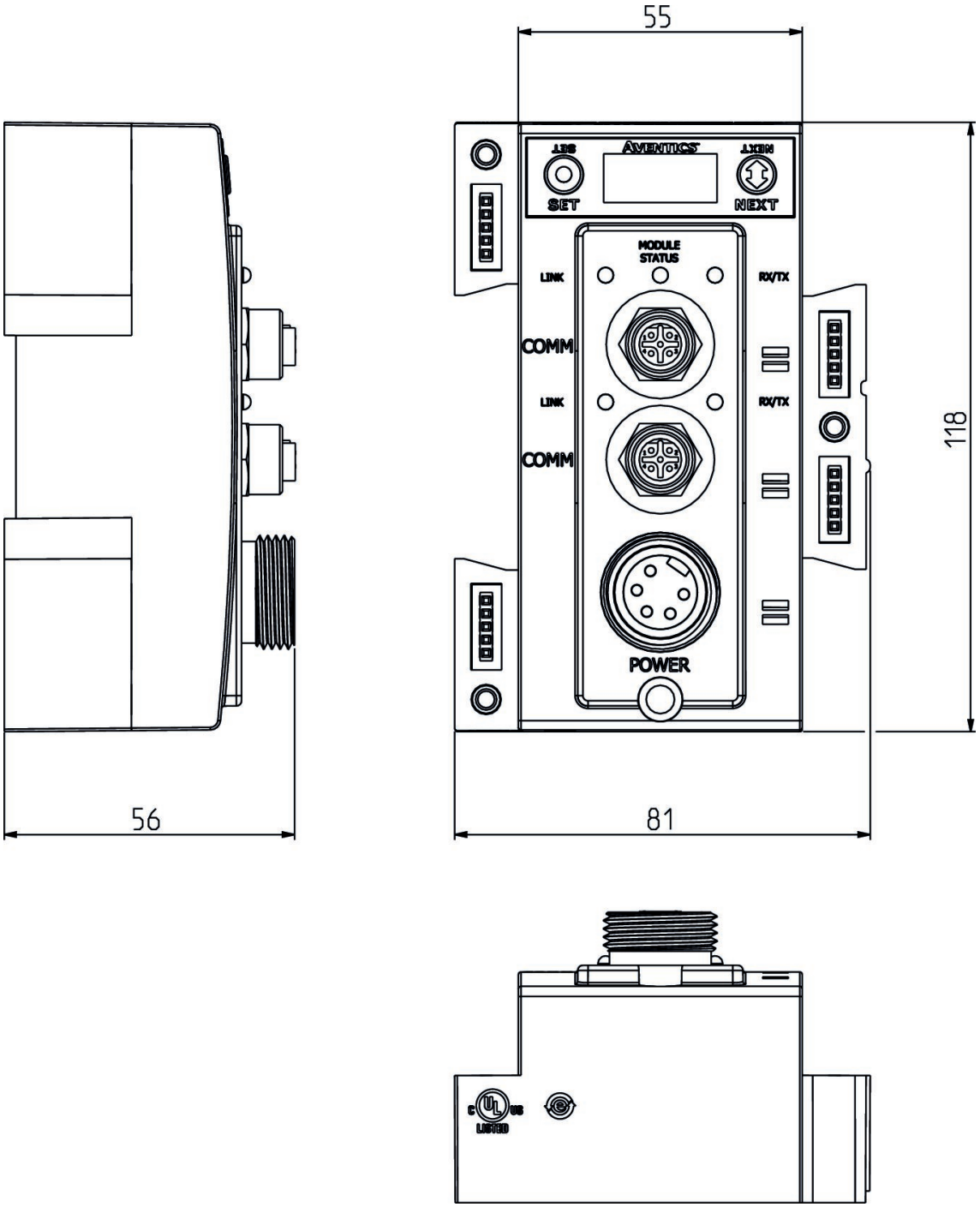
55
SET
NEXT
MODULE STATUS
LINK
RX/TX
COMM
LINK
RX/TX
COMM
POWER
118
56
81

G3 Subbus module

Electrical connection 2, thread size: 7/8″
Electrical connection 2, number of poles: 4-pin
Min. ambient temperature: -10 °C
Max. ambient temperature: 50 °C

Number of poles	Operational voltage electronics	Operational voltage electronics	Part No.
4-pin	24 V DC	-10 % / +10 %	240-241

Dimensions

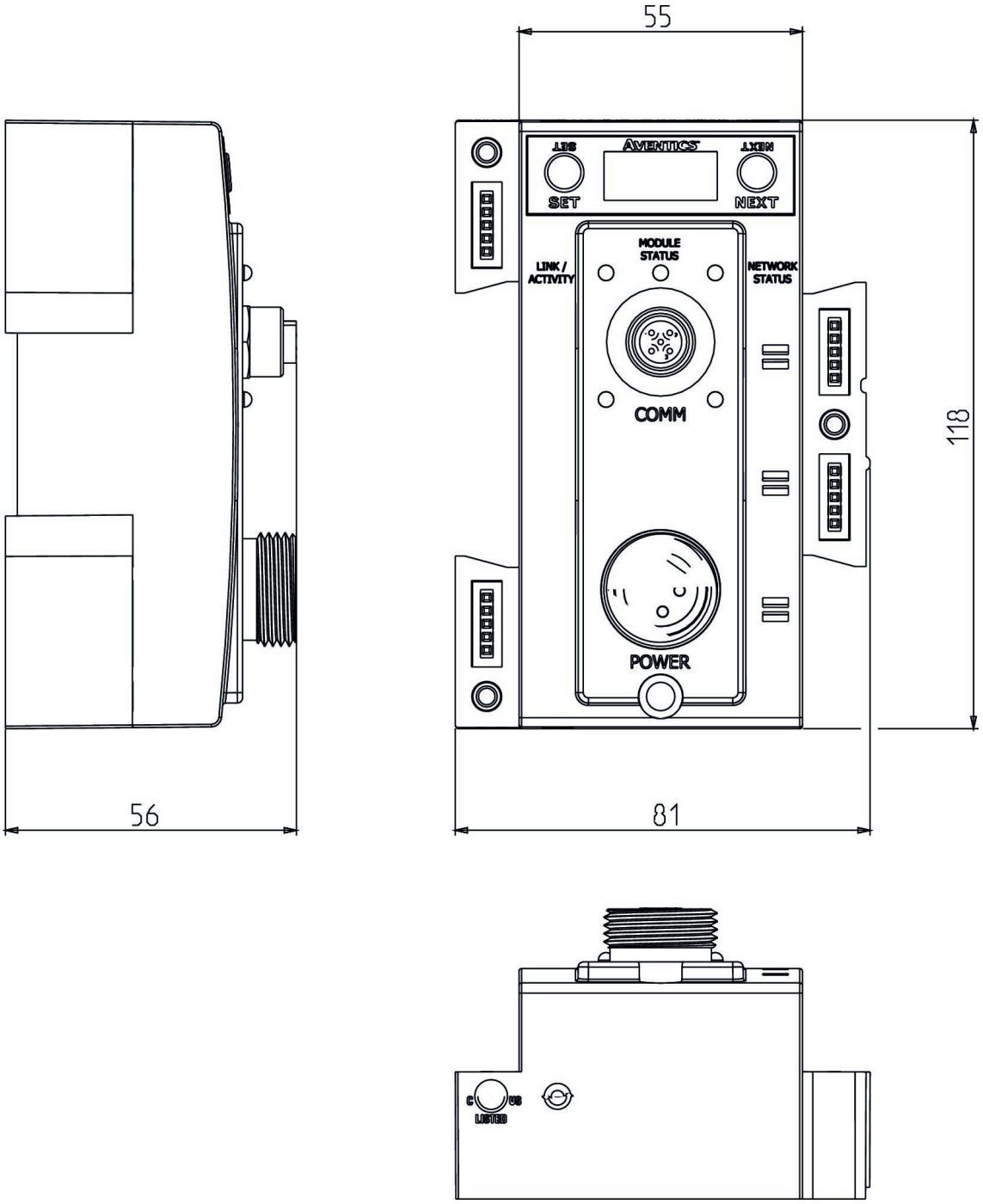
55
SET
AVENTICS
NEXT
MODULE STATUS
LINK / ACTIVITY
NETWORK STATUS
COMM
POWER
118
56
81
LISTED

End plate left

Operational voltage electronics	Operational voltage electronics	Part No.
24 V DC	-10 % / +10 %	240-184

Dimensions

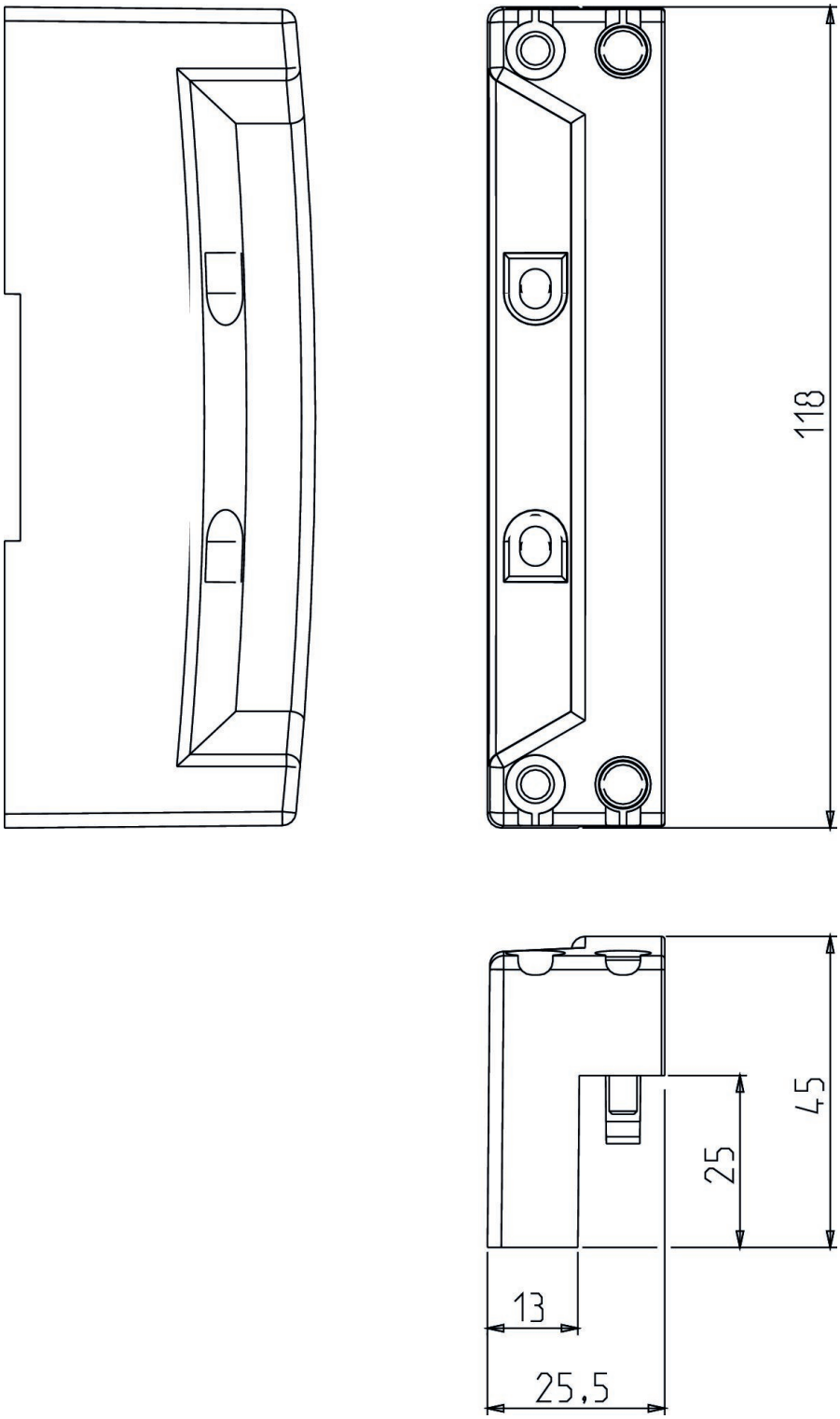

Left end plate for Subbus G3

Operational voltage electronics	Operational voltage electronics	Part No.
24 V DC	-10 % / +10 %	240-183

Dimensions

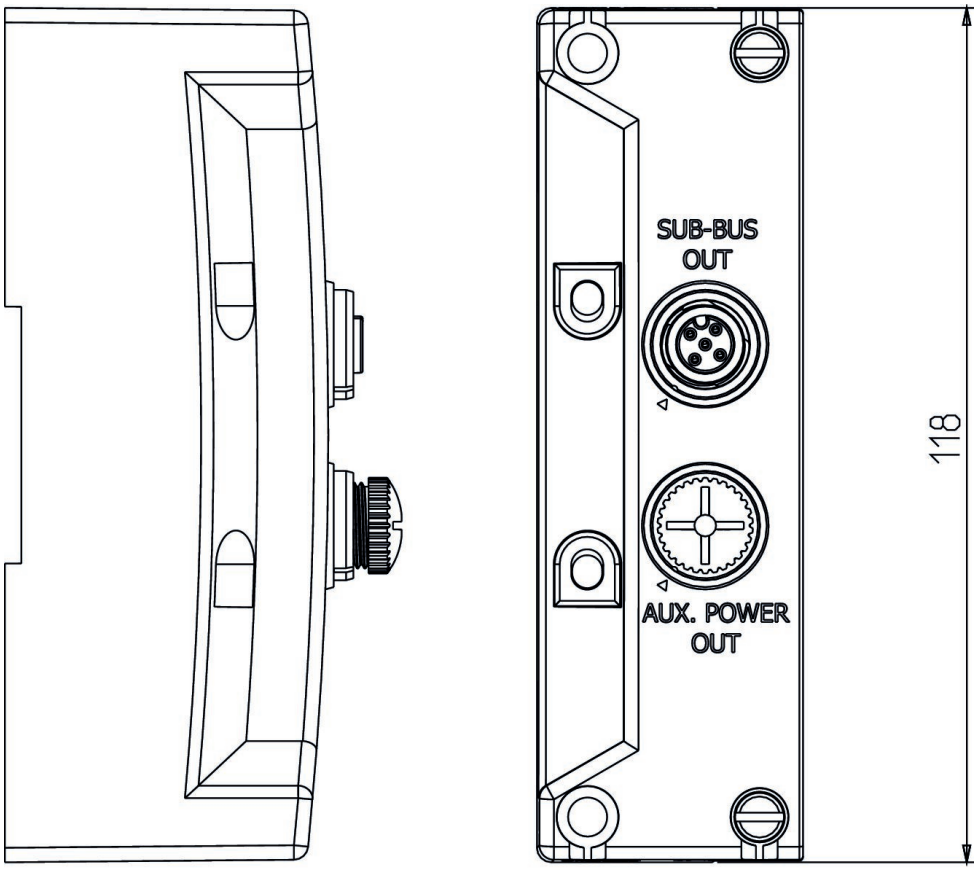
SUB-BUS
OUT
AUX. POWER
OUT
118

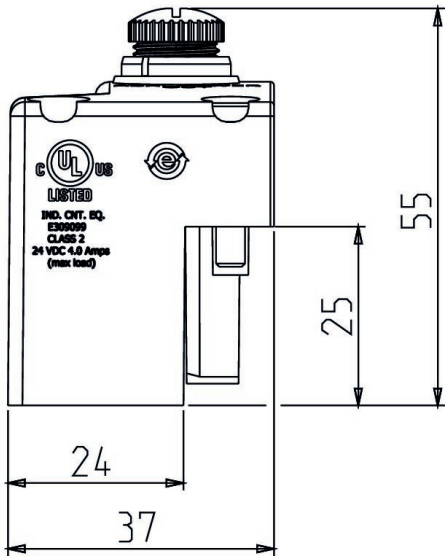
LISTED
IND. CNT. EQ.
E309099
CLASS 2
24 VDC 4.0 Amps
(max load)
55
25
24
37

Right end plate for Subbus G3

Operational voltage electronics	Operational voltage electronics	Part No.
24 V DC	-10 % / +10 %	240-185

Dimensions

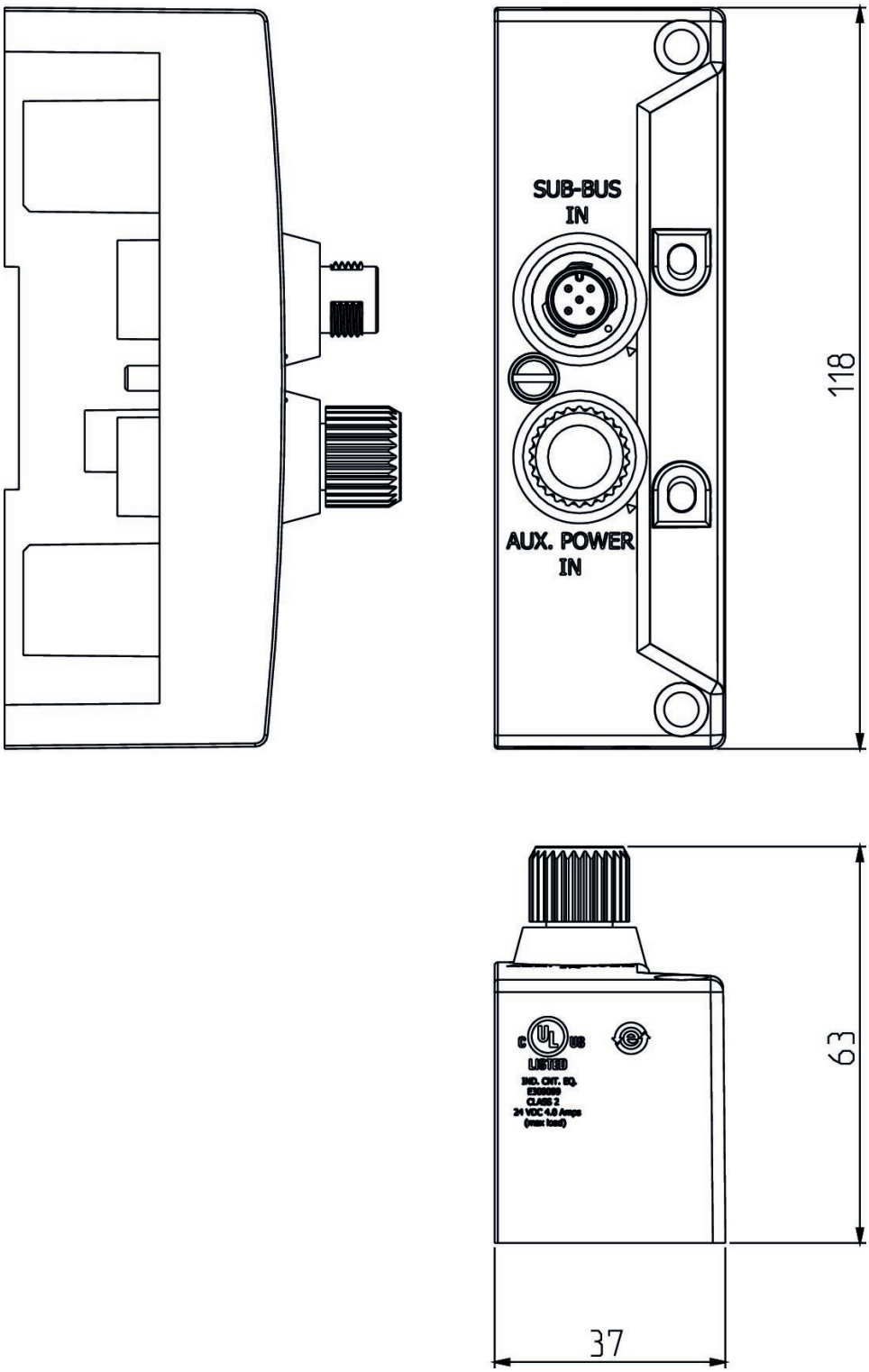

Right end plate for G3 Standalone

Operational voltage electronics	Operational voltage electronics	Part No.
24 V DC	-10 % / +10 %	240-255

Dimensions

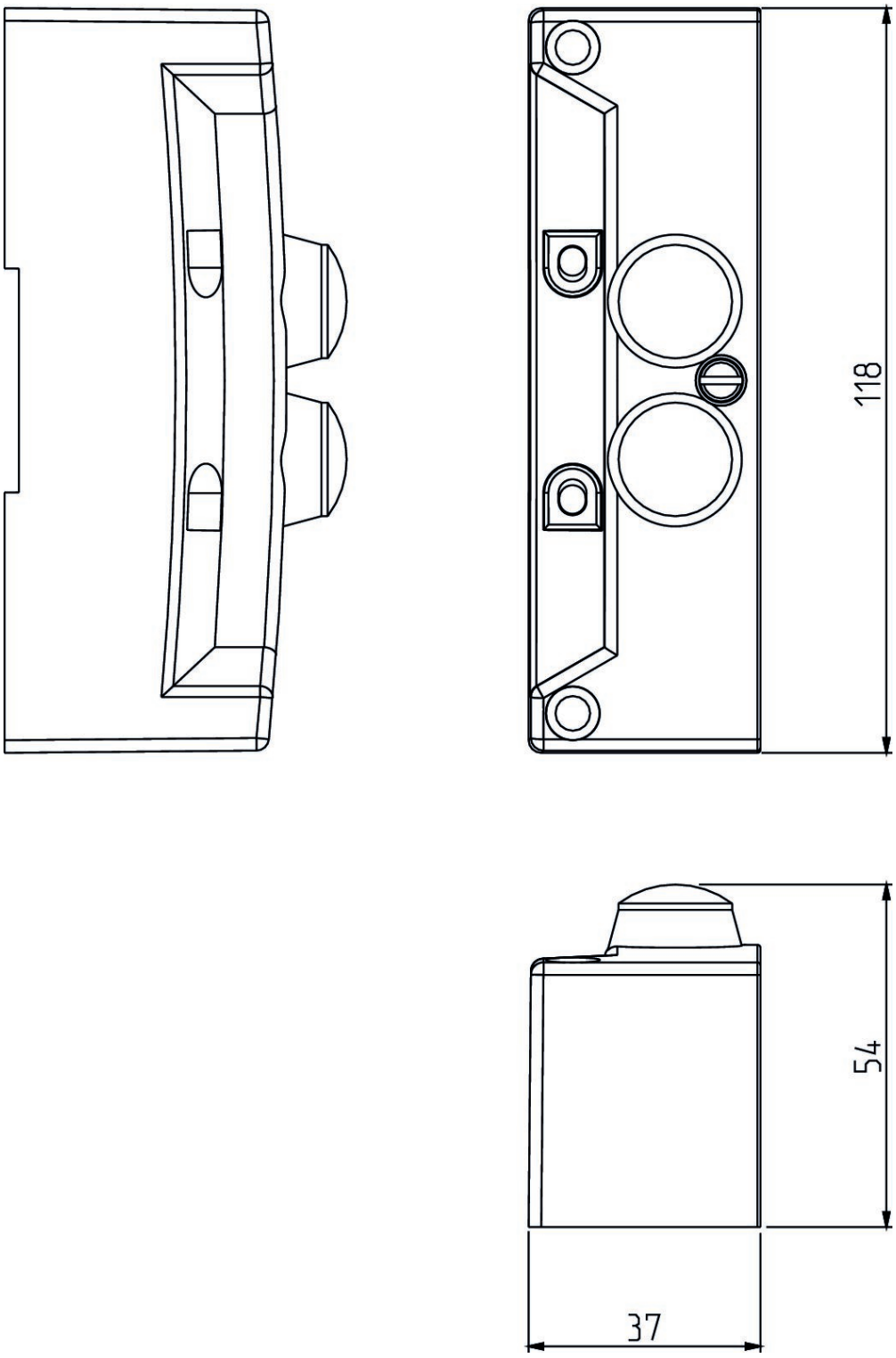

Wireless auto-recovery module, series G3

For series: G3
Min. ambient temperature: -10 °C
Max. ambient temperature: 50 °C

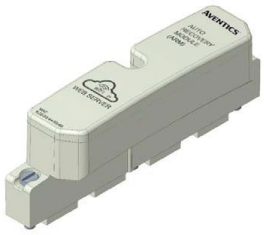

Type	Part No.
Auto recovery module (ARM)	240-382

Dimensions

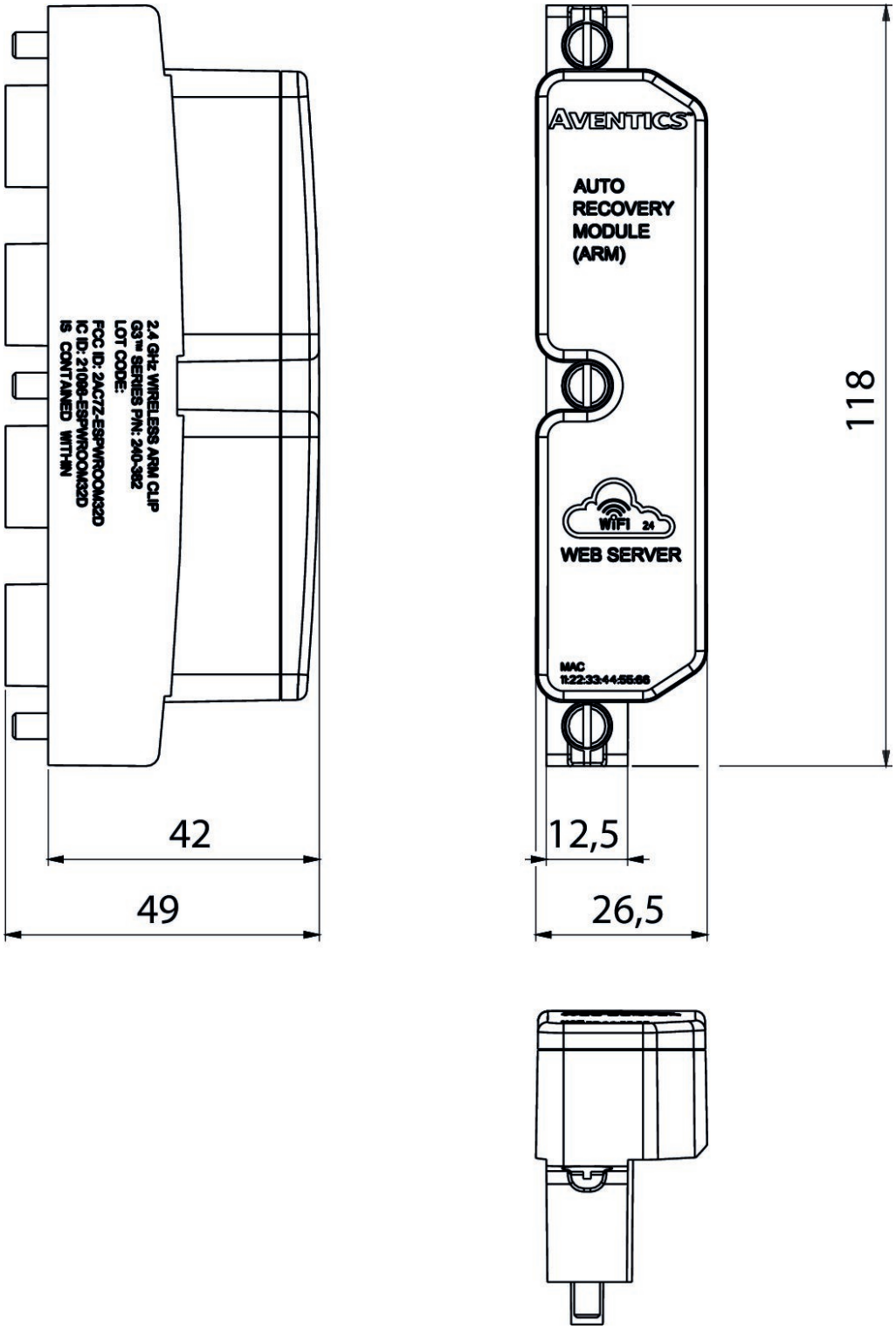
2.4 GHz WIRELESS ARM CLIP
G3™ SERIES P/N: 240-362
LOT CODE:
FCC ID: 2AC7Z-ESPWROOM32D
IC ID: 21098-ESPWROOM32D
IS CONTAINED WITHIN
42
49
AVENTICS
AUTO
RECOVERY
MODULE
(ARM)
WiFi 24
WEB SERVER
MAC
11:22:33:44:55:66
118
12,5
26,5

Y-Plug connector, series CON-AP

Electrical connection 1: Socket ... M12x1 ... 5-pin ... straight
Electrical connection 2: Plug ... M12x1 ... 5-pin ... straight
Electrical connection 3: Plug ... M12x1 ... 4-pin
Shielding: unshielded
Ambient temperature min./max.: -25 °C ... 90 °C

Operational voltage	Coding	Shielding	Max. current [A]	Part No.
60 V DC / 110 V AC	A-coded	unshielded	4	R412028657

Dimensions in mm

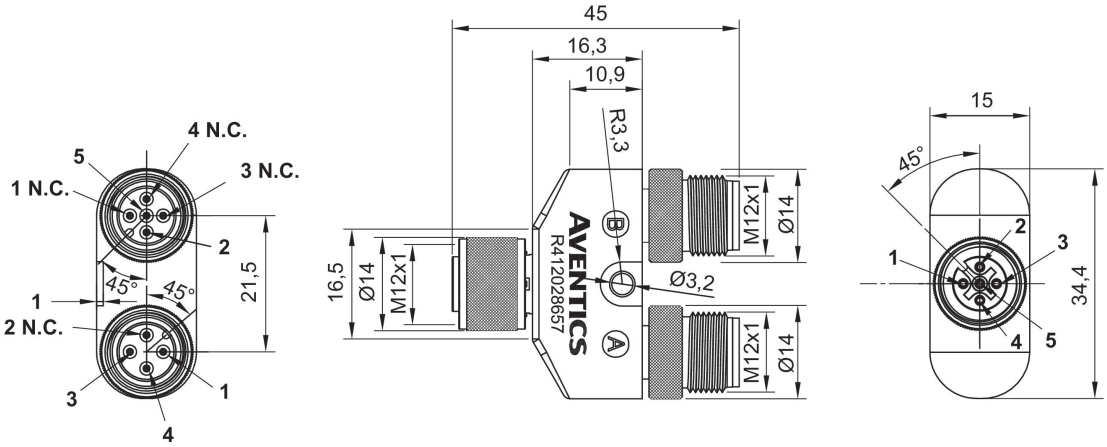

A = Electrical connection 2
B = Electrical connection 3

Connection piece

For series: G3 501 502 503

Material	Part No.
Poly-butyleneterepht-halate	240-179

Dimensions

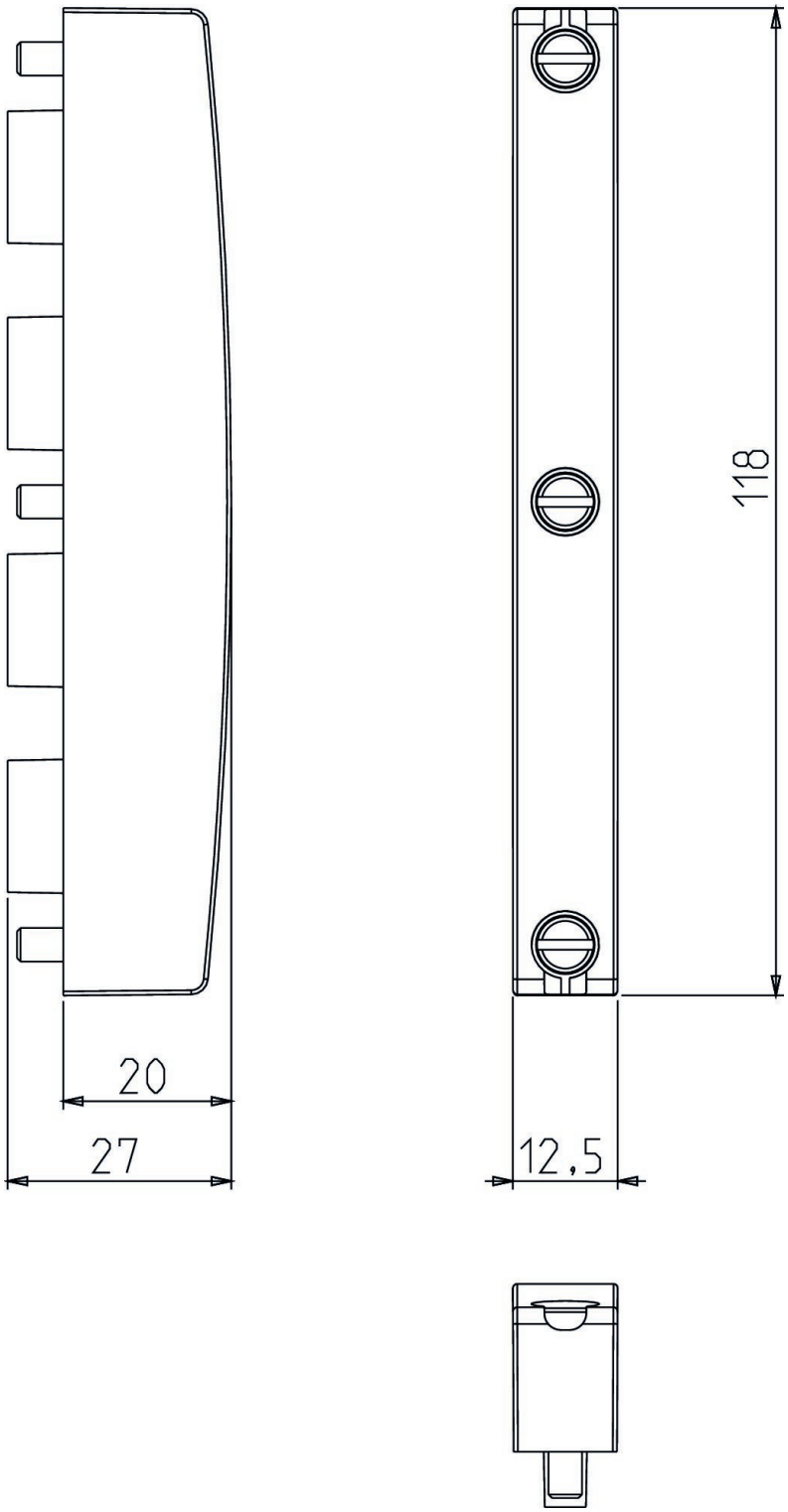

Efficient pneumatic solutions, our program: cylinders and drives, valves and valve systems, air supply management, proportional pressure control valves

Visit us: **www.Emerson.com/aventics**
Your local contact: **Emerson.com/contactus**

Emerson.com
Facebook.com/EmersonAutomationSolutions
LinkedIn.com/company/Emerson-Automation-Solutions
Twitter.com/EMR_Automation

The Emerson logo is a trademark and service mark of Emerson Electric Co. AVENTICS is a registered trademark of one of the Emerson family of companies. All other trademarks are the property of their respective owners. © 2020 Emerson Electric Co. All rights reserved.

EMERSON.

CONSIDER IT SOLVED™